US009636803B2

(12) **United States Patent**
Schuh

(10) **Patent No.: US 9,636,803 B2**
(45) **Date of Patent: May 2, 2017**

(54) **ACTUATING DEVICE**

(75) Inventor: **Bernhard Schuh**, Nuremberg (DE)

(73) Assignee: **DE-STA-CO Europe GmbH**, Oberursel (DE)

(*) Notice: Subject to any disclaimer, the term of this patent is extended or adjusted under 35 U.S.C. 154(b) by 153 days.

(21) Appl. No.: **13/817,101**

(22) PCT Filed: **Aug. 14, 2012**

(86) PCT No.: **PCT/DE2012/100239**
§ 371 (c)(1),
(2), (4) Date: **Jun. 15, 2014**

(87) PCT Pub. No.: **WO2013/023650**
PCT Pub. Date: **Feb. 21, 2013**

(65) **Prior Publication Data**

US 2014/0291908 A1 Oct. 2, 2014

(30) **Foreign Application Priority Data**

Aug. 15, 2011 (DE) 10 2011 110 129

(51) **Int. Cl.**
B25B 5/12 (2006.01)
B25B 5/16 (2006.01)
F16F 9/14 (2006.01)

(52) **U.S. Cl.**
CPC ***B25B 5/122*** (2013.01); ***B25B 5/16*** (2013.01); ***F16F 9/145*** (2013.01)

(58) **Field of Classification Search**
CPC B25B 1/14; B25B 1/18; B25B 1/2468; B25B 5/122
USPC 269/32
See application file for complete search history.

(56) **References Cited**

U.S. PATENT DOCUMENTS

1,873,100 A 8/1932 Allen
4,240,620 A * 12/1980 Tunkers B25B 5/122 269/24
6,220,588 B1 * 4/2001 Tunkers B25B 5/122 269/32
6,752,066 B2 * 6/2004 Varetto B25B 5/122 92/17
6,997,447 B2 * 2/2006 Fukui B25B 5/16 269/32

(Continued)

FOREIGN PATENT DOCUMENTS

DE 60203577 T2 1/2006
DE 102005049647 B3 6/2007

(Continued)

OTHER PUBLICATIONS

International Search Report and Written Opinion of the ISA, ISA/EP, Rijswijk, NL, mailed Nov. 20, 2012.

Primary Examiner — Larry E Waggle, Jr.
Assistant Examiner — Seahee Yoon
(74) *Attorney, Agent, or Firm* — Harness, Dickey & Pierce, P.L.C.

(57) **ABSTRACT**

An actuating device has a linearly-movable fluidly operated piston drive (**1**). A pivot shaft (**3**) is movably, rotatably mounted in a housing (**2**). A lever arm (**4**) is connected with the pivot shaft (**3**) in a torsionally rigid manner. An adjustment mechanism (**5**) connects the piston drive (**1**) with the pivot shaft (**3**). A damping device (**6**) dampens movement of the lever arm (**4**). The damping device (**6**) is associated with the housing (**2**) and with the pivot shaft (**3**).
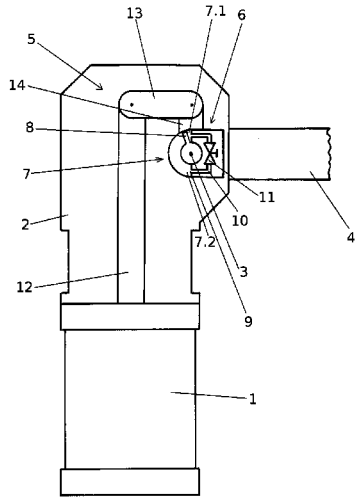
10 Claims, 2 Drawing Sheets