US006234703B1

(12) **United States Patent**
**Bieg et al.**

(10) **Patent No.: US 6,234,703 B1**
(45) **Date of Patent: May 22, 2001**

(54) **DOUBLE SLOTTED SOCKET SPHERICAL JOINT**

(75) Inventors: **Lothar F. Bieg**; **Gilbert L. Benavides**, both of Albuquerque, NM (US)

(73) Assignee: **Sandia Corporation**, Albuquerque, NM (US)

( * ) Notice: Subject to any disclaimer, the term of this patent is extended or adjusted under 35 U.S.C. 154(b) by 0 days.

(21) Appl. No.: **09/336,308**

(22) Filed: **Jun. 18, 1999**

(51) **Int. Cl.**[7] ..... **F16C 11/06**

(52) **U.S. Cl.** ..... **403/115**; 403/125; 403/143

(58) **Field of Search** ..... 403/116, 115, 403/114, 117, 113, 150, 122, 141, 142, 143, 125

(56) **References Cited**

U.S. PATENT DOCUMENTS

| | | | | |
|---|---|---|---|---|
| 320,436 | * | 6/1885 | Hock | 403/143 X |
| 325,352 | * | 9/1885 | McKay | 403/115 X |
| 1,086,375 | * | 2/1914 | LaFrance | 403/116 X |
| 2,126,443 | * | 8/1938 | Begley | 403/114 X |
| 2,681,783 | * | 6/1954 | Smith | 403/125 |
| 3,072,426 | * | 1/1963 | Gilbert | 403/115 |
| 3,210,103 | * | 10/1965 | Montgomery et al. | 403/115 |
| 3,250,555 | * | 5/1966 | Wehner | 403/125 |
| 3,414,302 | * | 12/1968 | Priest | 403/125 |
| 3,638,243 | * | 2/1972 | Campbell, Jr. et al. | 403/115 X |
| 3,667,789 | * | 6/1972 | McNeely et al. | 403/125 |
| 4,347,014 | * | 8/1982 | Smith | 403/125 X |
| 5,899,167 | * | 5/1999 | Furman | 403/143 X |
| 6,024,261 | * | 2/2000 | Tseng | 403/122 X |

FOREIGN PATENT DOCUMENTS

| | | | | |
|---|---|---|---|---|
| 1001078 | * | 10/1951 | (FR) | 403/125 |

* cited by examiner

*Primary Examiner*—Lynne H. Browne
*Assistant Examiner*—David E. Bochna
(74) *Attorney, Agent, or Firm*—Brian W. Dodson

(57) **ABSTRACT**

A new class of spherical joints is disclosed. These spherical joints are capable of extremely large angular displacements (full cone angles in excess of 270°), while exhibiting no singularities or dead spots in their range of motion. These joints can improve or simplify a wide range of mechanical devices.
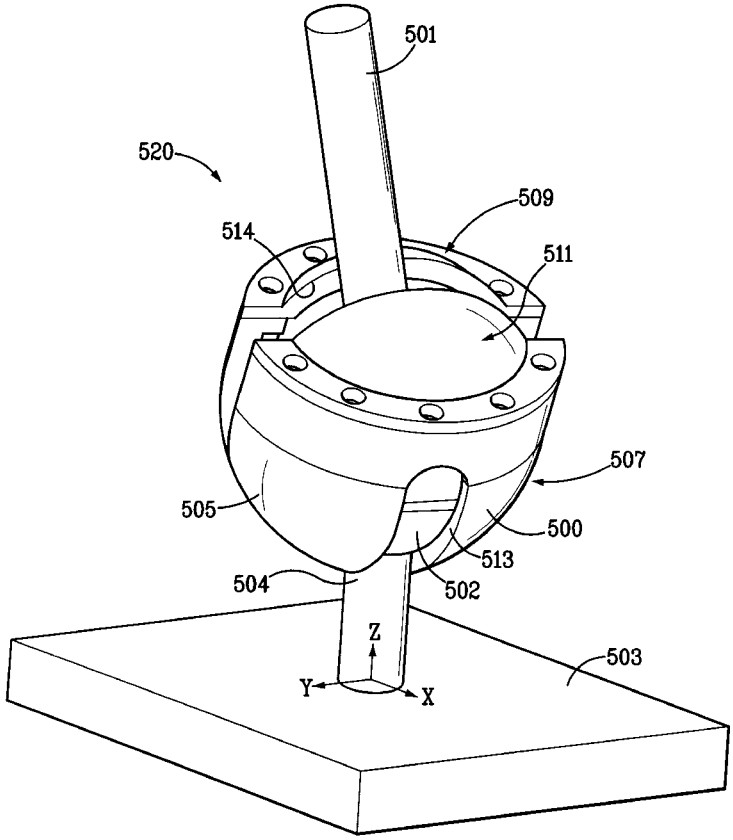
**16 Claims, 6 Drawing Sheets**