US006134103A

United States Patent [19]

Ghanma

[11] **Patent Number: 6,134,103**

[45] **Date of Patent: Oct. 17, 2000**

[54] **FLAT PANEL DISPLAY WITH ADJUSTABLE HEIGHT FOR A PORTABLE COMPUTER**

[76] Inventor: **Tony Ghanma**, 410 Milan Dr. #115, San Jose, Calif. 95051

[21] Appl. No.: **09/183,780**

[22] Filed: **Oct. 30, 1998**

[51] **Int. Cl.**[7] **G06F 1/16**

[52] **U.S. Cl.** **361/681**; 361/727; 248/917; 248/918; 248/920; 248/923

[58] **Field of Search** 361/681, 682; 248/920, 917, 918, 921, 922, 923

[56] **References Cited**

U.S. PATENT DOCUMENTS

4,395,010	7/1983	Helgeland et al.	248/920
4,669,694	6/1987	Malick	248/923
5,128,662	7/1992	Failla	361/681
5,148,282	9/1992	Sedighzadeh	348/825
5,209,448	5/1993	Hatanaka et al.	361/681
5,229,920	7/1993	Spaniol et al.	361/681
5,267,123	11/1993	Boothroyd et al.	361/681
5,337,212	8/1994	Bartlett et al.	361/681
5,644,469	7/1997	Shioya et al.	361/681
5,668,570	9/1997	Ditzik	361/681
5,769,369	6/1998	Meinel	248/917
5,812,368	9/1998	Chen et al.	361/681

Primary Examiner—Leo P. Picard
Assistant Examiner—John D. Reed
Attorney, Agent, or Firm—Kevin H. Fortin, Esq.

[57] **ABSTRACT**

An apparatus for an adjustable display for a portable computer results in ergonomic viewing angles for the display. The adjustable display for the portable computer comprises a main computer enclosure, a support slab coupled to the main computer enclosure, and a flat panel display slidably coupled to the support slab configured to slide along the support slab to raise and lower the flat panel display with respect to the main computer enclosure.
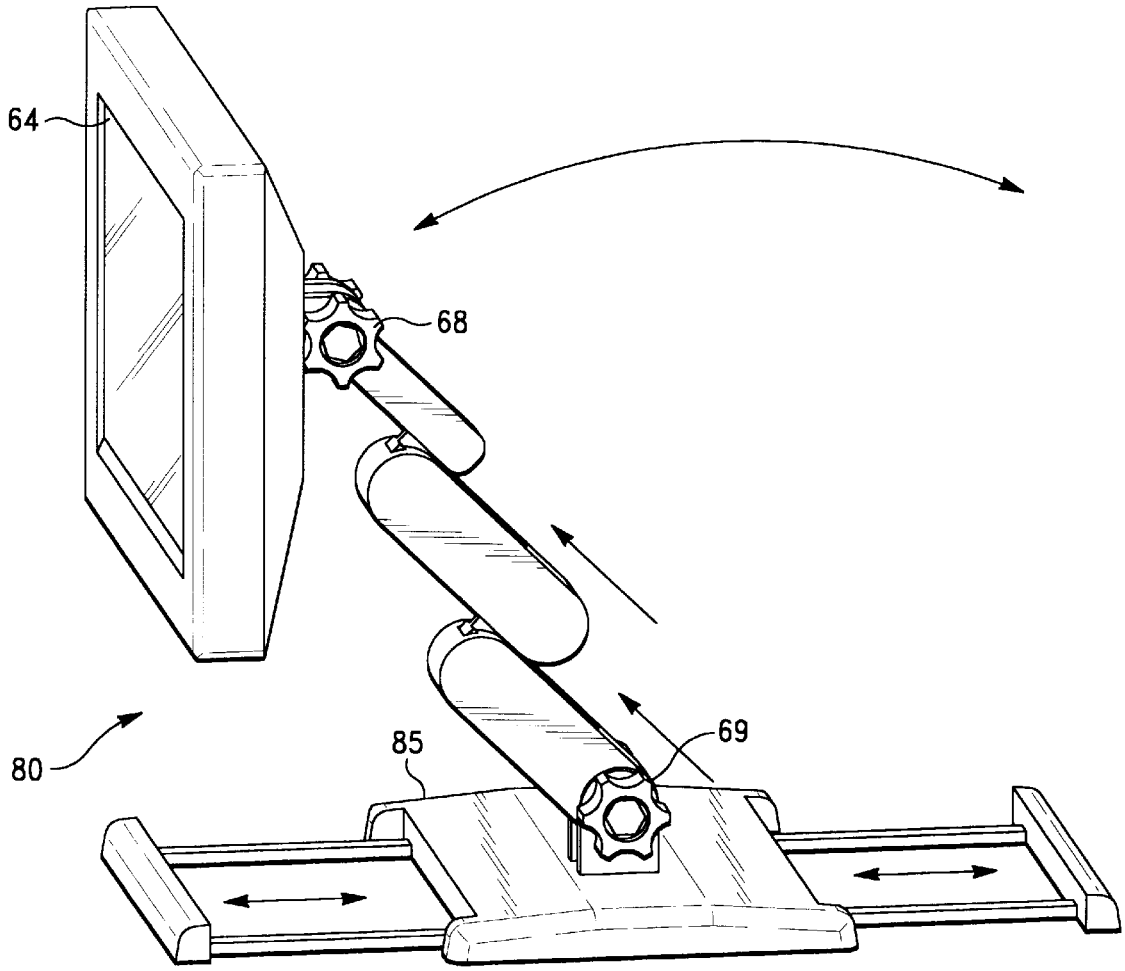
6 Claims, 5 Drawing Sheets