April 12, 1960 A. E. LE VAN 2,932,503

SPRINGS

Filed Aug. 28, 1956

Fig. 1.

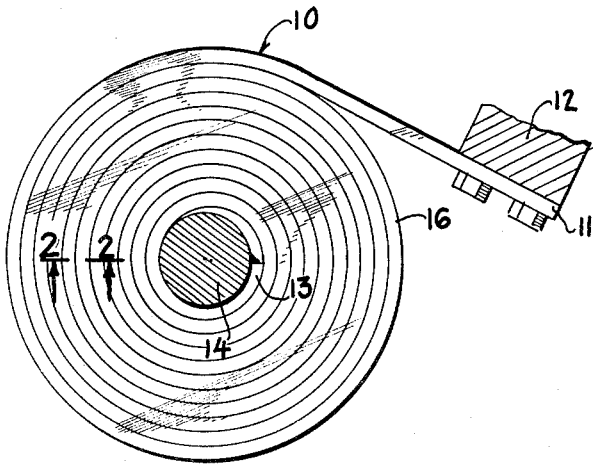

Fig. 2.

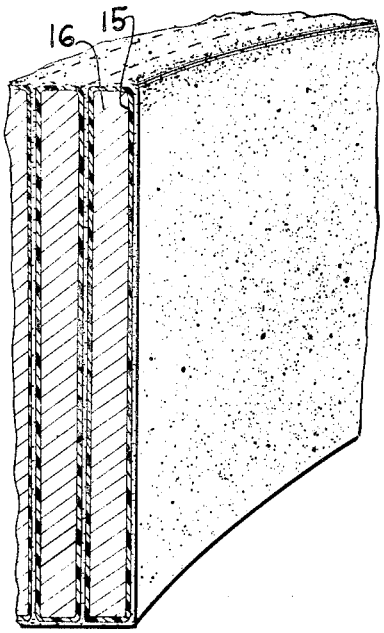

Fig. 3.

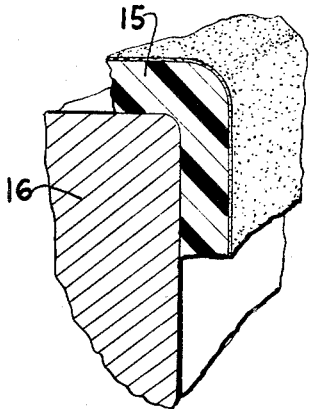

INVENTOR
Ambrose E. Le Van
BY
Pollard Johnston Smyth & Robertson
ATTORNEYS