350-481 SR ROSS REFERENCE SEARCH ROOM
XR 3,027,803 3R

April 3, 1962 I. P. FILDERMAN 3,027,803

SPECTACLE LENS-CONTACT LENS SYSTEM

Filed June 29, 1959

X2853

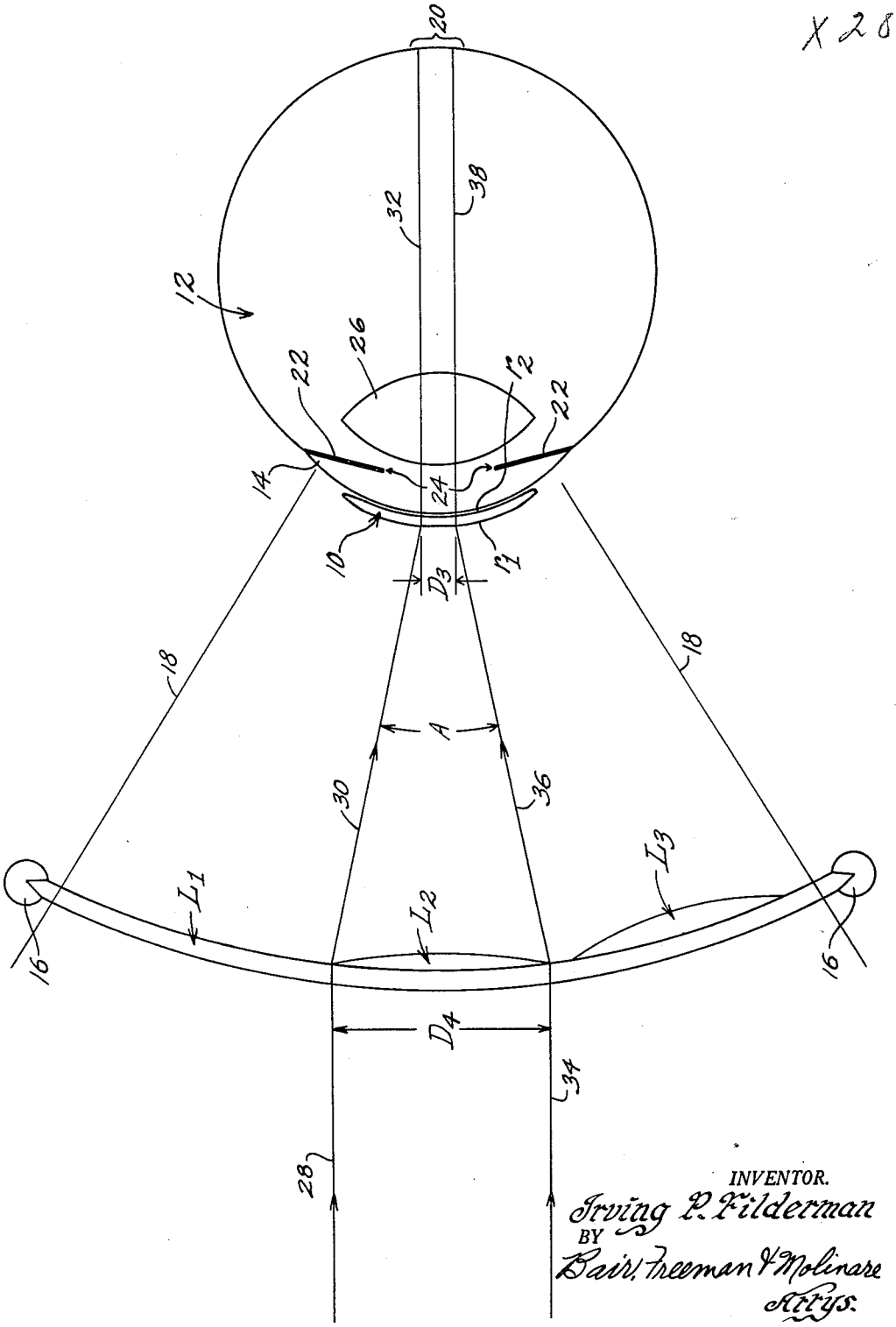

INVENTOR.
Irving P. Filderman
BY
Bair, Freeman & Molinare
Attys.

3027803
OR 351/168B