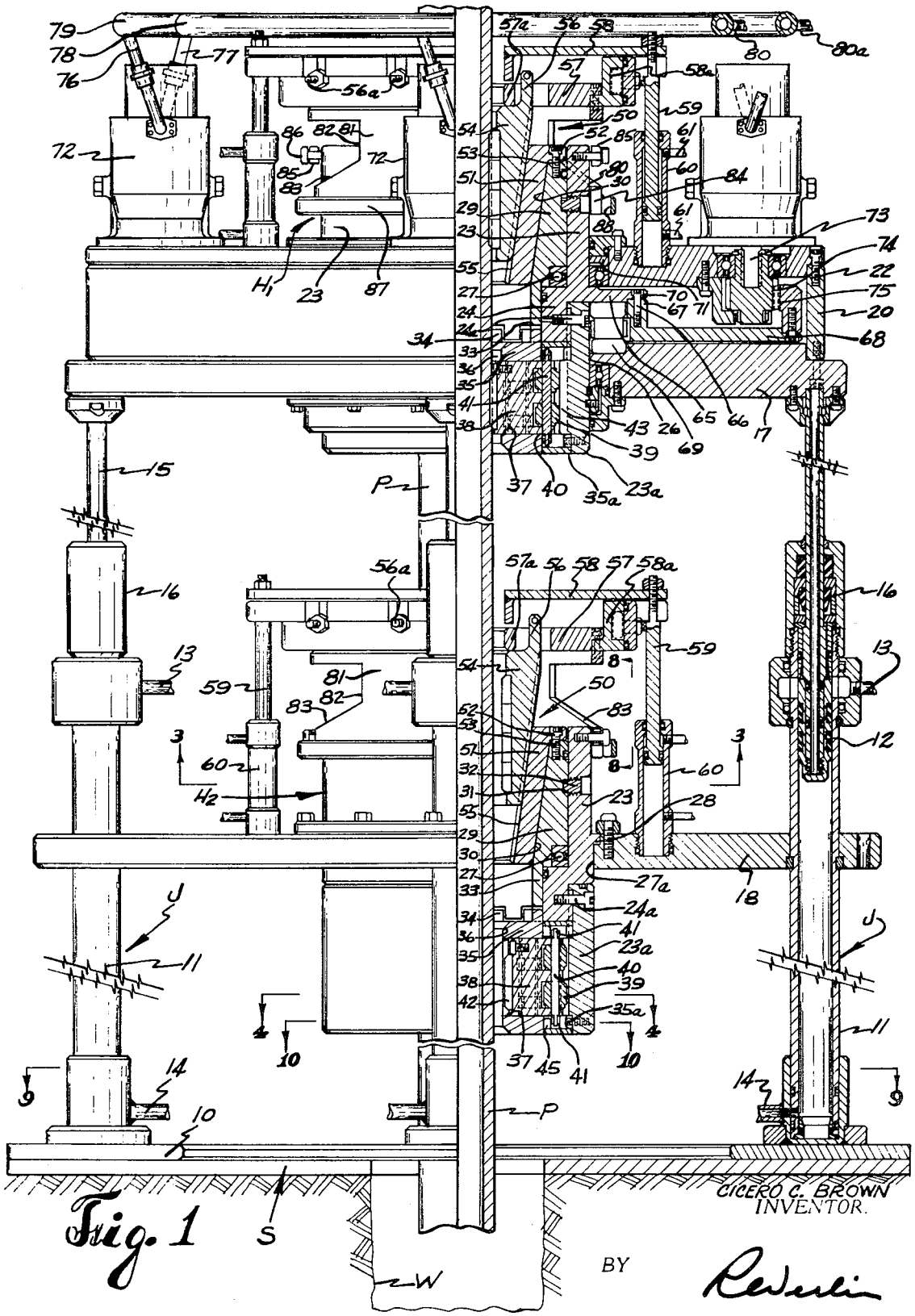

Fig. 1

CICERO C. BROWN
INVENTOR.

BY

ATTORNEY