US00D820403S

(12) United States Design Patent

Garland

(10) Patent No.: US D820,403 S

(45) Date of Patent: ** Jun. 12, 2018

(54) **TUB FAUCET**

(71) Applicant: **DELTA FAUCET COMPANY**, Indianapolis, IN (US)

(72) Inventor: **Celine Kwok Garland**, Zionsville, IN (US)

(73) Assignee: **DELTA FAUCET COMPANY**, Indianapolis, IN (US)

(**) Term: **15 Years**

(21) Appl. No.: **29/599,116**

(22) Filed: **Mar. 31, 2017**

(51) **LOC (11) Cl.** **23-01**

(52) **U.S. Cl.**
USPC **D23/239**

(58) **Field of Classification Search**
USPC D23/238–243, 249–250, 252, 254–255, D23/257; D08/307–308
CPC Y10T 137/9464
See application file for complete search history.

(56) **References Cited**

U.S. PATENT DOCUMENTS

D461,536 S * 8/2002 Singtoroj D23/252
D479,582 S * 9/2003 Citterio D23/239
D488,539 S * 4/2004 McKeone D23/255
D515,671 S * 2/2006 Toyohara D23/241
D573,693 S * 7/2008 Hsieh D23/242
D603,481 S * 11/2009 Zetsche D23/242
D613,824 S * 4/2010 Sofield D23/252
D615,627 S * 5/2010 Sofield D23/252
D640,353 S * 6/2011 Gao D23/255
D648,003 S * 11/2011 Gao D23/255
D648,829 S * 11/2011 Gao D23/252
D785,436 S * 5/2017 Carlino D8/308
D800,269 S * 10/2017 Garland D23/252
D800,271 S * 10/2017 Andrew D23/252

* cited by examiner

Primary Examiner — Robert A Delehanty
(74) *Attorney, Agent, or Firm* — Edgar A. Zarins; Nirav D. Parikh

(57) **CLAIM**

The ornamental design for a tub faucet, as shown and described.

DESCRIPTION

FIG. **1** is a perspective view of a tub faucet showing my new design;
FIG. **2** is a front elevational view thereof;
FIG. **3** is a top plan view thereof;
FIG. **4** is a rear view thereof;
FIG. **5** is a right side view thereof;
FIG. **6** is a left side view thereof; and,
FIG. **7** is a bottom view thereof.
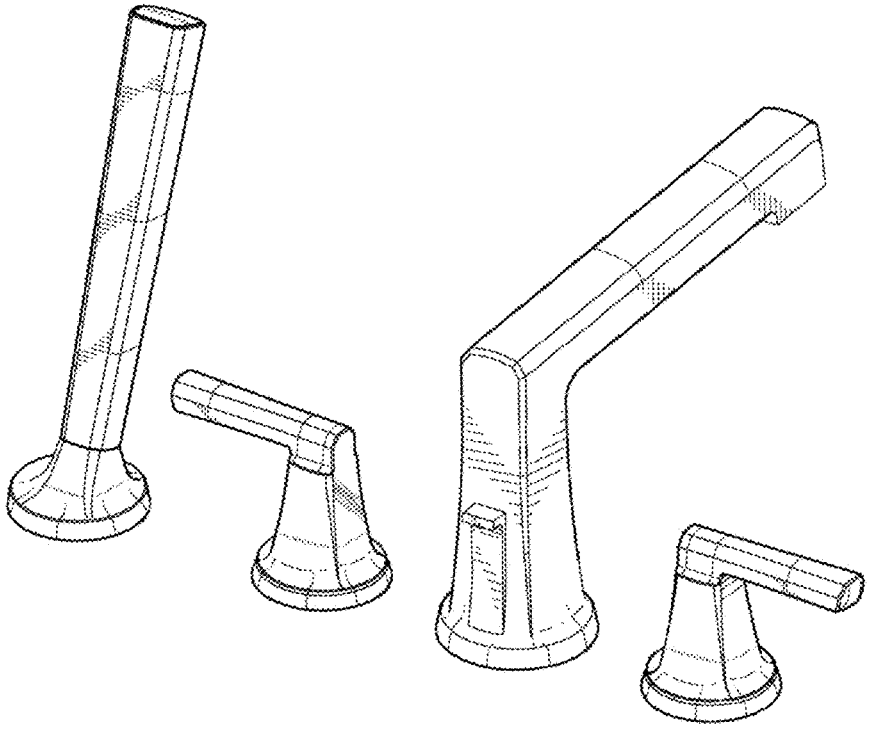
1 Claim, 7 Drawing Sheets