US009410903B2

(12) **United States Patent**
Duncan et al.

(10) **Patent No.: US 9,410,903 B2**
(45) **Date of Patent: Aug. 9, 2016**

(54) **INCOHERENT REFLECTOMETRY UTILIZING CHAOTIC EXCITATION OF LIGHT SOURCES**

(75) Inventors: **Roger Glen Duncan**, Christiansburg, VA (US); **Brooks A. Childers**, Christiansburg, VA (US); **Philip Robin Couch**, Devon (GB)

(73) Assignee: **BAKER HUGHES INCORPORATED**, Houston, TX (US)

(*) Notice: Subject to any disclaimer, the term of this patent is extended or adjusted under 35 U.S.C. 154(b) by 1202 days.

(21) Appl. No.: **13/271,968**

(22) Filed: **Oct. 12, 2011**

(65) **Prior Publication Data**

US 2013/0093599 A1 Apr. 18, 2013

(51) **Int. Cl.**
G01V 3/00 (2006.01)
G01N 21/954 (2006.01)

(52) **U.S. Cl.**
CPC ***G01N 21/954*** (2013.01)

(58) **Field of Classification Search**
CPC .. G01N 21/00; G01N 21/954; G01D 5/35383
USPC 340/850–856; 385/12; 398/78, 87; 356/73.1
See application file for complete search history.

(56) **References Cited**

U.S. PATENT DOCUMENTS

5,513,196 A * 4/1996 Bischel et al. 372/22
5,579,328 A * 11/1996 Habel et al. 372/31
5,675,674 A * 10/1997 Weis 385/12
6,285,806 B1 * 9/2001 Kersey et al. 385/12
6,892,031 B2 * 5/2005 Lee 398/78
7,453,100 B2 11/2008 Funabashi et al.
7,548,319 B2 * 6/2009 Hartog 356/478
2004/0027560 A1 * 2/2004 Fredin et al. 356/73.1
2004/0091009 A1 * 5/2004 Matsuda et al. 372/43
2006/0072638 A1 * 4/2006 Tanaka 372/38.02
2007/0098032 A1 * 5/2007 Johnson 372/50.11
2007/0131418 A1 * 6/2007 Barrow et al. 166/255.1
2008/0095203 A1 * 4/2008 Bratkovski et al. 372/26
2010/0092176 A1 * 4/2010 Hartog et al. 398/79
2011/0142085 A1 * 6/2011 Yousefi 372/20
2011/0217036 A1 * 9/2011 Campanelli et al. 398/13
2011/0228255 A1 * 9/2011 Li et al. 356/33

OTHER PUBLICATIONS

Ryu, et al. "Incoherent Optical Frequency Domain Reflectometry for Health Monitoring of avionics Fiber Optics Networks" . IEEE, Avionics, Fiber-Optics and Photonics Technology conference. Sep. 30-Oct. 2, 2008. pp. 15-16.

* cited by examiner

Primary Examiner — Hai Phan
Assistant Examiner — Royit Yu
(74) *Attorney, Agent, or Firm* — Cantor Colburn LLP

(57) **ABSTRACT**

A method for estimating a parameter includes: transmitting a control signal to a coherent optical source, the control signal configured to chaotically vary an output of the optical source and generate a chaotically excited optical signal; transmitting the optical signal from the optical source into an optical fiber, the optical fiber including at least one sensing location; receiving a reflected signal including light reflected from the at least one sensing location; and estimating a value of the parameter using the reflected signal.
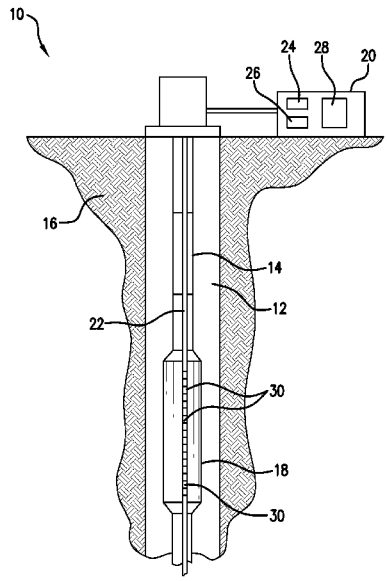
14 Claims, 4 Drawing Sheets