US009410703B2

(12) **United States Patent**
Bunel et al.

(10) **Patent No.: US 9,410,703 B2**
(45) **Date of Patent: Aug. 9, 2016**

(54) **DEVICE FOR INJECTING A MIXTURE OF AIR AND FUEL INTO A TURBINE ENGINE COMBUSTION CHAMBER**

(71) Applicant: **SNECMA**, Paris (FR)

(72) Inventors: **Jacques Marcel Arthur Bunel**, Thiais (FR); **Gilles Ulryck**, Ballancourt sur Essonne (FR)

(73) Assignee: **SNECMA**, Paris (FR)

(*) Notice: Subject to any disclaimer, the term of this patent is extended or adjusted under 35 U.S.C. 154(b) by 644 days.

(21) Appl. No.: **13/836,510**

(22) Filed: **Mar. 15, 2013**

(65) **Prior Publication Data**

US 2013/0283803 A1 Oct. 31, 2013

(30) **Foreign Application Priority Data**

Mar. 29, 2012 (FR) 12 52856

(51) **Int. Cl.**
F23R 3/14 (2006.01)
F23R 3/28 (2006.01)
F23R 3/60 (2006.01)

(52) **U.S. Cl.**
CPC . ***F23R 3/286*** (2013.01); ***F23R 3/14*** (2013.01); ***F23R 3/283*** (2013.01); ***F23R 3/60*** (2013.01); *F23D 2211/00* (2013.01); *F23R 2900/00017* (2013.01)

(58) **Field of Classification Search**
CPC F23R 3/14; F23R 3/283; F23R 3/286; F23R 3/60; F23R 2900/00017; F23D 2211/00
USPC 60/737, 772, 746, 754, 776
See application file for complete search history.

(56) **References Cited**

U.S. PATENT DOCUMENTS

4,525,996	A	7/1985	Wright et al.	
6,164,074	A	12/2000	Madden et al.	
2002/0178734	A1	12/2002	Stastny	
2005/0039458	A1	2/2005	Leen et al.	
2006/0207258	A1	9/2006	Tanner et al.	
2007/0033950	A1	2/2007	Bernier et al.	
2008/0245074	A1 *	10/2008	Oda et al.	60/737
2011/0000216	A1	1/2011	Imamura et al.	
2011/0131998	A1 *	6/2011	Nadkarni et al.	60/737
2012/0198653	A1	8/2012	Tanner et al.	
2012/0304649	A1 *	12/2012	Matsuyama et al.	60/737

FOREIGN PATENT DOCUMENTS

EP	1 508 743 A2	2/2005
EP	1 731 837 A2	12/2006

OTHER PUBLICATIONS

French Preliminary Search Report issued Nov. 21, 2012, in Patent Application No. FR 1252856, filed Mar. 29, 2012 (With English Translation of Category of Cited Documents).

* cited by examiner

Primary Examiner — Jesse Bogue
Assistant Examiner — Dapinder Singh
(74) *Attorney, Agent, or Firm* — Oblon, McClelland, Maier & Neustadt, L.L.P.

(57) **ABSTRACT**

A device for injecting a mixture of air and fuel into a turbine engine combustion chamber, the device including a mechanism for centering a fuel injector, which mechanism is movable radially in a support mechanism fastened to a wall of the chamber, the support mechanism carrying a retaining mechanism for axially retaining the centering mechanism on a side opposite from the chamber wall, the retaining mechanism being fastened in releasable manner to the support mechanism.
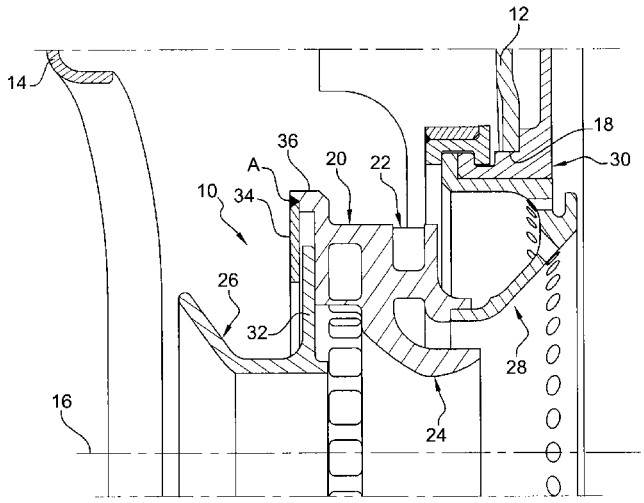
9 Claims, 4 Drawing Sheets