US009410603B2

(12) **United States Patent**
Cho et al.

(10) **Patent No.: US 9,410,603 B2**
(45) **Date of Patent: Aug. 9, 2016**

(54) **VEHICLE MULTISTAGE TRANSMISSION**

(71) Applicant: **Hyundai Motor Company**, Seoul (KR)

(72) Inventors: **Won Min Cho**, Hwaseong-si (KR); **Jae Chang Kook**, Hwaseong-si (KR); **Myeong Hoon Noh**, Seongnam-si (KR); **Seong Wook Ji**, Ansan-si (KR); **Kang Soo Seo**, Yongin-si (KR); **Seong Wook Hwang**, Gunpo-si (KR)

(73) Assignee: **Hyundai Motor Company**, Seoul (KR)

(*) Notice: Subject to any disclaimer, the term of this patent is extended or adjusted under 35 U.S.C. 154(b) by 0 days.

(21) Appl. No.: **14/741,909**

(22) Filed: **Jun. 17, 2015**

(65) **Prior Publication Data**

US 2016/0146307 A1 May 26, 2016

(30) **Foreign Application Priority Data**

Nov. 26, 2014 (KR) 10-2014-0166589

(51) **Int. Cl.**
F16H 3/66 (2006.01)

(52) **U.S. Cl.**
CPC ***F16H 3/66*** (2013.01); *F16H 2200/0069* (2013.01); *F16H 2200/2012* (2013.01); *F16H 2200/2046* (2013.01); *F16H 2200/2097* (2013.01)

(58) **Field of Classification Search**
CPC F16H 3/66
See application file for complete search history.

(56) **References Cited**

U.S. PATENT DOCUMENTS

8,303,455	B2	11/2012	Gumpoltsberger et al.
2002/0119859	A1	8/2002	Raghavan et al.
2008/0103015	A1	5/2008	Seo
2010/0048344	A1	2/2010	Kamm et al.
2010/0069195	A1	3/2010	Baldwin
2015/0094185	A1	4/2015	Beck et al.
2015/0119188	A1	4/2015	Beck et al.

FOREIGN PATENT DOCUMENTS

KR	2011-0131816	A	12/2011
KR	2013-0031455	A	3/2013
KR	2013-0077146	A	7/2013

Primary Examiner — Derek D Knight
(74) *Attorney, Agent, or Firm* — Morgan, Lewis & Bockius LLP

(57) **ABSTRACT**

A vehicle multistage transmission capable of realizing at least forward ten shift stages and a reverse first shift stage may include an input shaft and an output shaft, a first planetary gear unit, a second planetary gear unit, a third planetary gear unit, and a fourth planetary gear unit provided to transfer rotational force between the input shaft and the output shaft, each having three rotation elements, and at least six shift elements connected to at least one of the three rotation elements of the first, second, third, and fourth planetary gear units
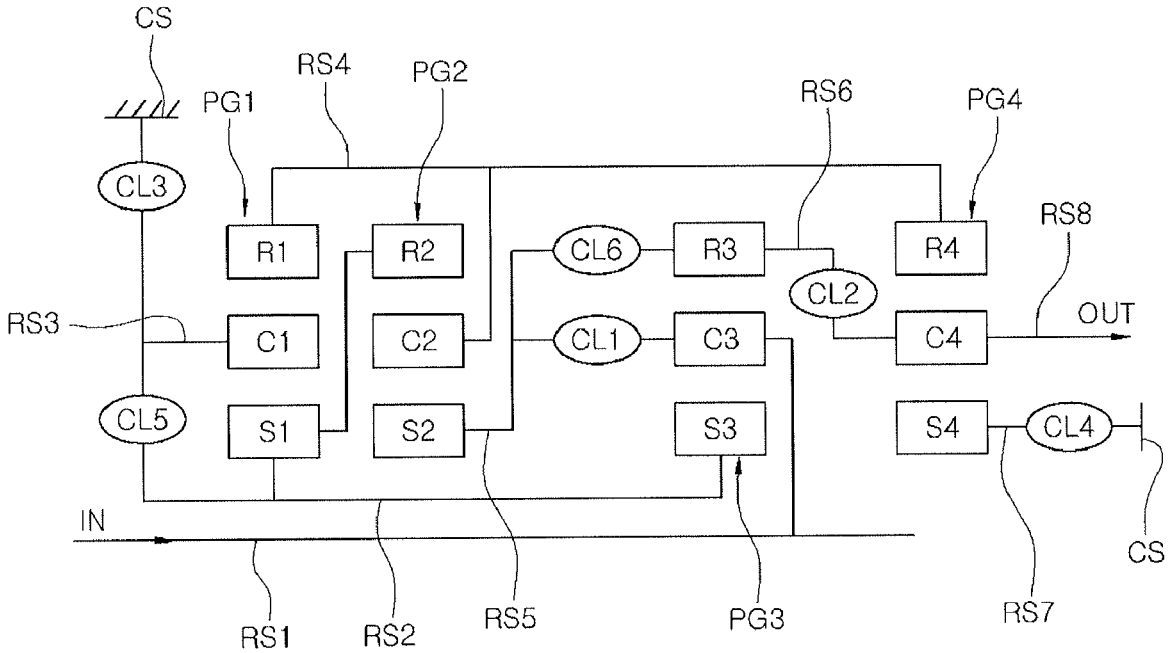
7 Claims, 2 Drawing Sheets