US009510503B2

(12) **United States Patent**
Elhardt et al.

(10) **Patent No.: US 9,510,503 B2**
(45) **Date of Patent: Dec. 6, 2016**

(54) **GRASS MOWING MACHINE OPERATOR PLATFORM**

(71) Applicants: **Paul Elhardt**, Charlotte, NC (US); **Kyle T. Ressler**, West Bend, WI (US); **Thomas R. Genz**, Lake Mills, WI (US)

(72) Inventors: **Paul Elhardt**, Charlotte, NC (US); **Kyle T. Ressler**, West Bend, WI (US); **Thomas R. Genz**, Lake Mills, WI (US)

(73) Assignee: **DEERE & COMPANY**, Moline, IL (US)

(*) Notice: Subject to any disclaimer, the term of this patent is extended or adjusted under 35 U.S.C. 154(b) by 0 days.

(21) Appl. No.: **13/653,959**

(22) Filed: **Oct. 17, 2012**

(65) **Prior Publication Data**

US 2014/0103629 A1 Apr. 17, 2014

(51) **Int. Cl.**

B60P 3/22	(2006.01)
A01D 34/00	(2006.01)
A01D 34/81	(2006.01)

(52) **U.S. Cl.**

CPC ***A01D 34/001*** (2013.01); ***A01D 34/81*** (2013.01)

(58) **Field of Classification Search**

CPC A01D 34/81
USPC 296/65.05, 181.2, 901.01
See application file for complete search history.

(56) **References Cited**

U.S. PATENT DOCUMENTS

3,093,948	A *	6/1963	Root	56/17.1
3,934,392	A *	1/1976	Moery et al.	56/202
4,738,328	A *	4/1988	Hayden	180/307
4,924,665	A *	5/1990	Crosley	56/295
5,042,239	A *	8/1991	Card	56/14.7
5,238,267	A	8/1993	Hutchison et al.	
5,558,368	A	9/1996	Cerny et al.	
5,638,668	A *	6/1997	Kallevig et al.	56/320.1
5,727,372	A *	3/1998	Kanitz et al.	56/11.9
5,787,693	A *	8/1998	Dyke	56/11.9
6,497,453	B2	12/2002	Bates et al.	
6,530,200	B1 *	3/2003	Minoura et al.	56/17.1
6,708,805	B2 *	3/2004	Samejima et al.	192/13 A
7,458,432	B2 *	12/2008	Mayer et al.	180/6.32
7,607,283	B2 *	10/2009	Wright et al.	56/17.1
7,686,108	B2 *	3/2010	Piontek	180/6.48
7,712,294	B2 *	5/2010	Wright et al.	56/17.1
7,882,914	B2	2/2011	Scheele et al.	
7,950,211	B1 *	5/2011	Ta	56/12.7
8,087,481	B2 *	1/2012	Trefz et al.	180/6.32
8,186,475	B2	5/2012	Sugden et al.	
8,235,151	B2 *	8/2012	Nunez et al.	180/6.32
8,522,901	B1 *	9/2013	Vanlue	180/6.32

(Continued)

FOREIGN PATENT DOCUMENTS

EP 0523850 A2 1/1993

OTHER PUBLICATIONS

EP Search Report dated Jan. 29, 2014 (5 pages).

Primary Examiner — Joseph Rocca
Assistant Examiner — Conan Duda

(57) **ABSTRACT**

A grass mowing machine operator platform includes a one-piece plastic composite molded structure with a top surface and an outer wall, and a plurality of slots in the top surface and outer wall. A pair of steering levers may be pivotably mounted to steering pivot bolts in the slots in the top surface, and a brake lever pivotably mounted in a slot in the outer wall. The slots where the steering levers and brake lever are mounted have integral bearing surfaces.
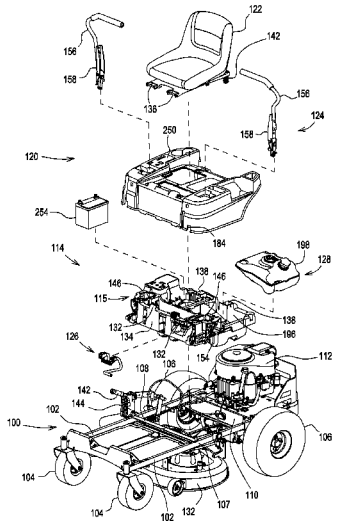
14 Claims, 8 Drawing Sheets