March 24, 1931. J. SOSS 1,797,802

CONCEALED HINGE

Filed Oct. 30, 1928

Fig. 1.

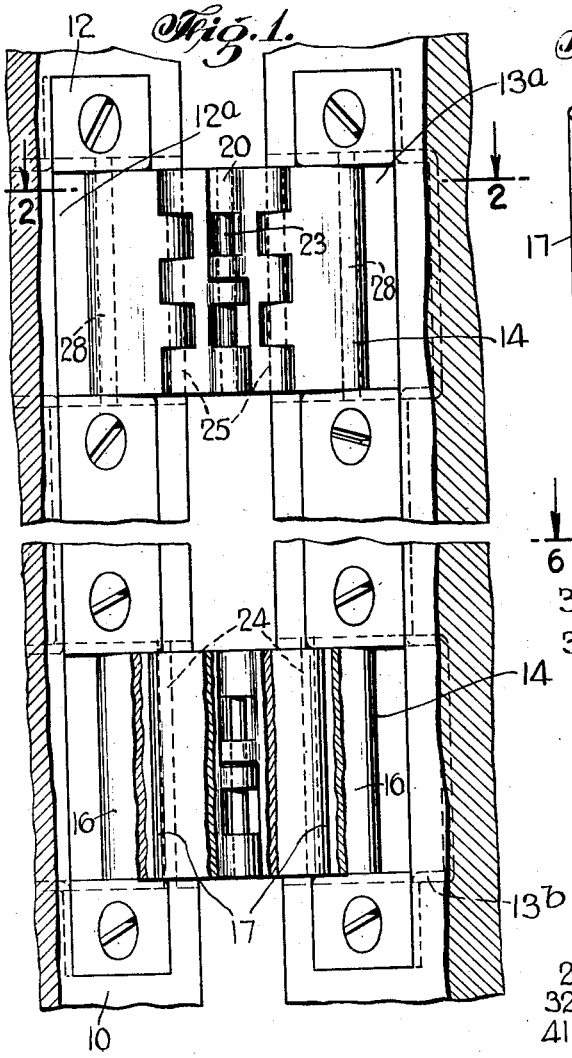

Fig. 3.

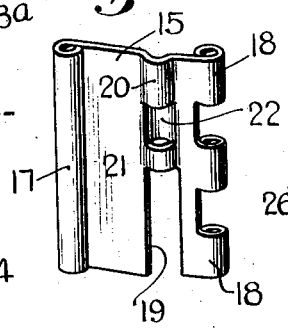

Fig. 4.

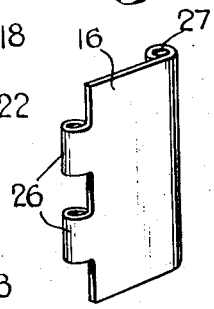

Fig. 5.

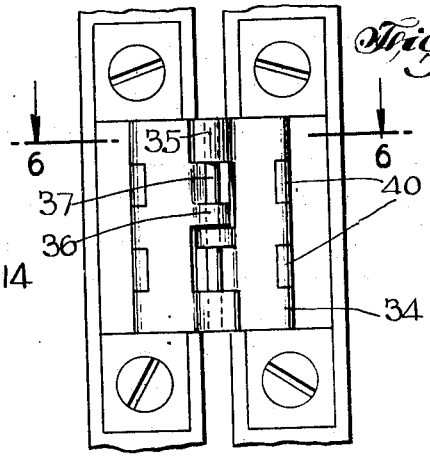

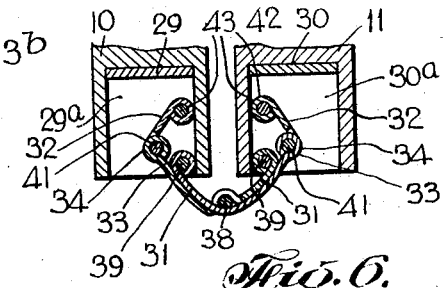

Fig. 6.

Fig. 2.

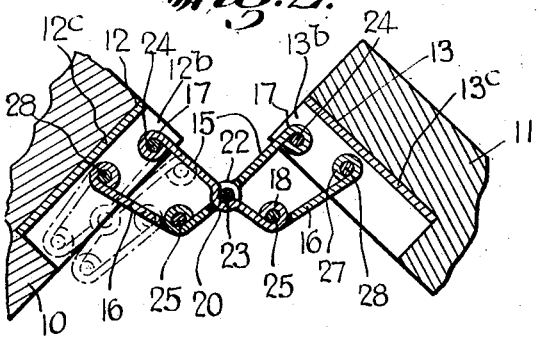

INVENTOR
Joseph Soss
BY
Howard C. Thompson
ATTORNEY