United States Patent [19]

Knecht

[11] **4,387,002**

[45] **Jun. 7, 1983**

[54] **ADHESIVE DISCHARGE DEVICE**

[75] Inventor: **Siegfried H. Knecht,** Gevelsberg, Fed. Rep. of Germany

[73] Assignee: **Maschinenfabrik Alfred Schmermund GmbH & Co.,** Fed. Rep. of Germany

[21] Appl. No.: **408,145**

[22] Filed: **Aug. 16, 1982**

Related U.S. Application Data

[63] Continuation of Ser. No. 234,650, Feb. 17, 1981, abandoned.

[30] **Foreign Application Priority Data**

Mar. 29, 1980 [DE] Fed. Rep. of Germany 3012371

[51] **Int. Cl.**[3] **B65D 47/40;** B67D 3/02

[52] **U.S. Cl.** **156/578;** 118/268; 118/302; 118/711; 222/187; 222/402.12; 222/556; 222/562

[58] **Field of Search** 156/578; 118/203, 241, 118/268, 302, 711; 222/187, 402.1, 402.12, 556, 562

[56] **References Cited**

U.S. PATENT DOCUMENTS

2,718,870	9/1955	McFarland	118/203
2,737,416	3/1956	Behr et al.	222/402.12
2,806,443	9/1957	Horn et al.	118/241
3,876,144	4/1975	Madden et al.	118/302
3,964,835	6/1976	Eigenmann	156/578

Primary Examiner—Michael G. Wityshyn

Attorney, Agent, or Firm—Williamson, Bains, Moore & Hansen

[57] **ABSTRACT**

An adhesive discharge device for use with adhesive which sets by the evaporation of a solvent. The device incorporates a valve-controlled discharge nozzle for intermittent discharge of adhesive on a cycle basis. Drying of adhesive around the nozzle opening when the valve is closed and the discharge of adhesive is interrupted is prevented by a movable closure cap containing a solvent vaporizer. The closure cap is movable into a position enclosing and sealing the nozzle opening, and the vaporization of solvent inside the closure cap around the nozzle opening prevents the drying and encrustation of adhesive.
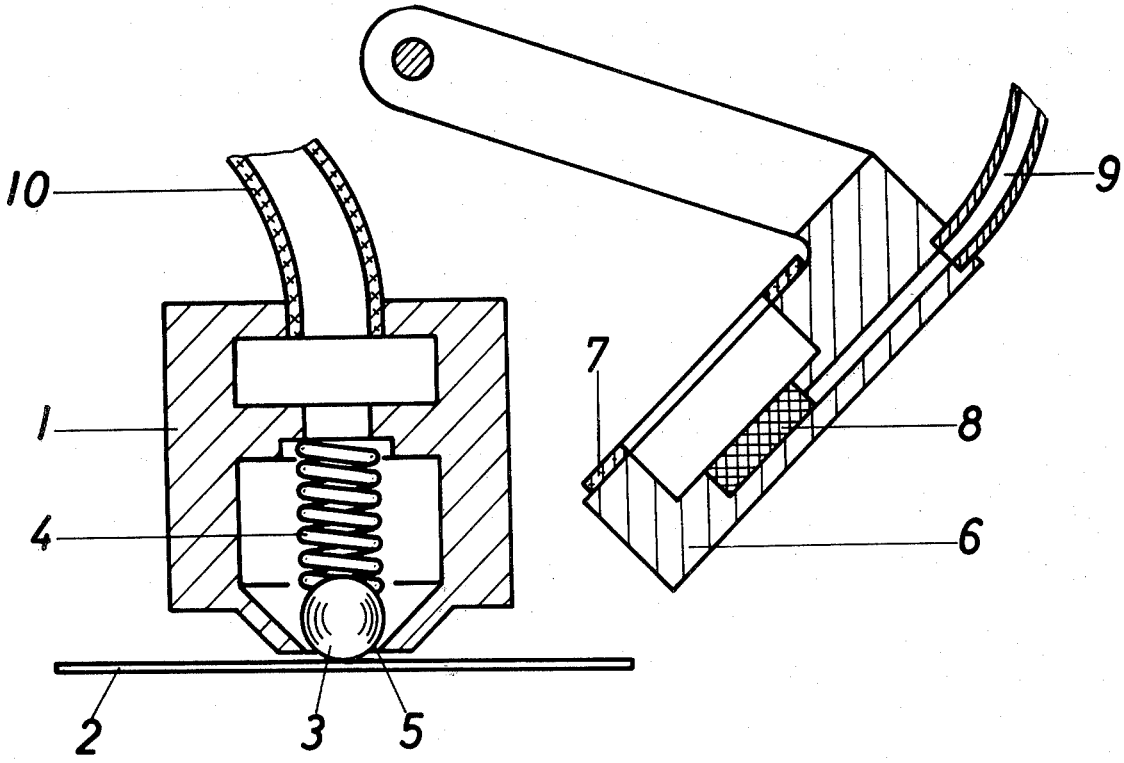
7 Claims, 2 Drawing Figures