FIG. 1

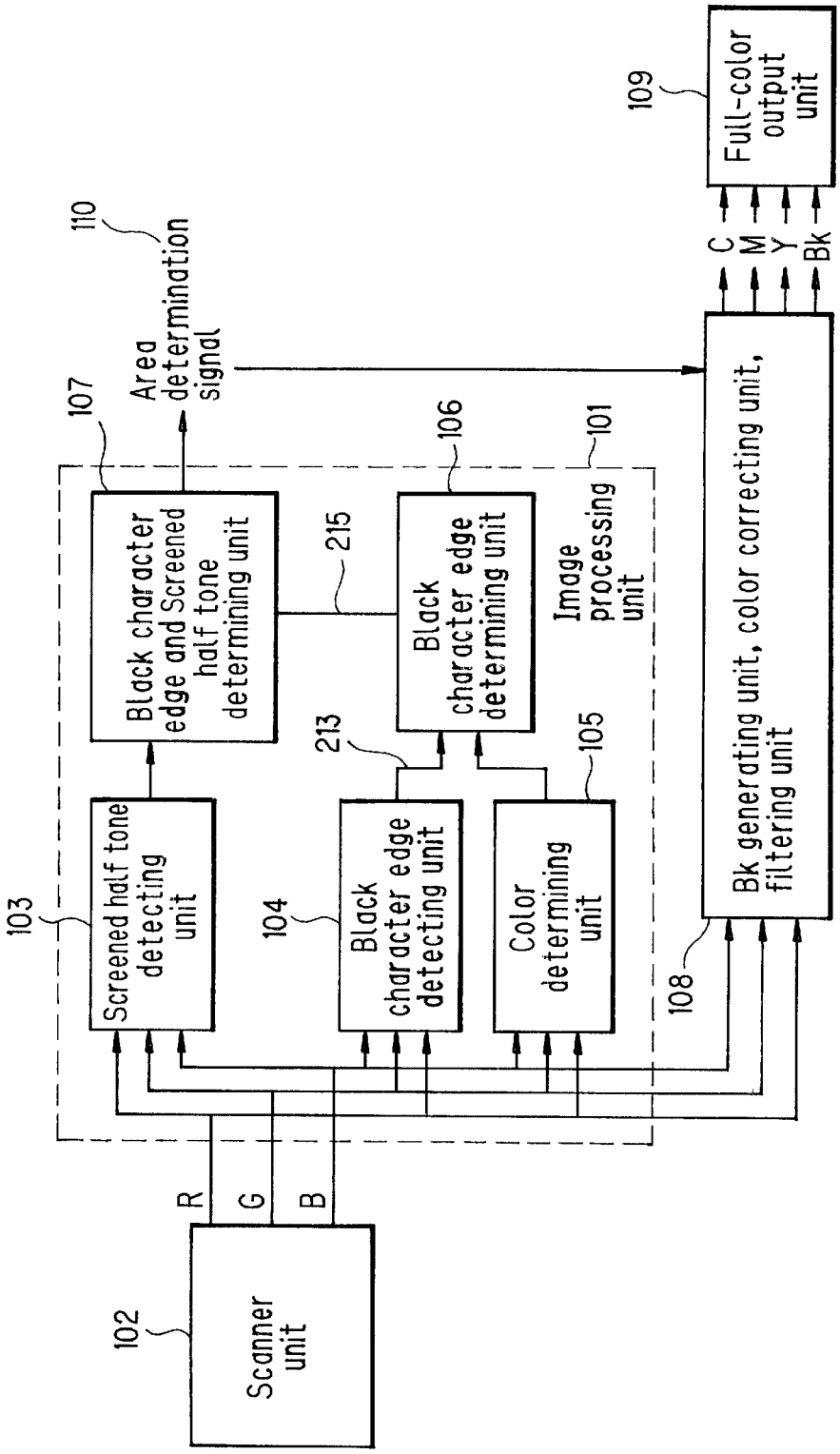
Scanner unit
102
R
G
B
Screened half tone detecting unit
103
Black character edge detecting unit
104
Color determining unit
105
Black character edge and Screened half tone determining unit
107
Black character edge determining unit
106
215
213
Image processing unit
101
Area determination signal
110
Bk generating unit, color correcting unit, filtering unit
108
C
M
Y
Bk
Full-color output unit
109