United States Patent [19]

Fergason et al.

[11] **Patent Number: 4,772,102**

[45] **Date of Patent: Sep. 20, 1988**

[54] **DISPLAY WITH LIGHT TRAPS BETWEEN REFLECTOR AND SCATTERING MEANS**

[75] Inventors: **James L. Fergason**, Atherton; **Robert Parker**, Alamo, both of Calif.

[73] Assignee: **Taliq Corporation**, Sunnyvale, Calif.

[21] Appl. No.: **105,550**

[22] Filed: **Oct. 5, 1987**

Related U.S. Application Data

[60] Division of Ser. No. 53,583, May 18, 1987, which is a continuation of Ser. No. 645,457, Aug. 28, 1984, abandoned.

[51] **Int. Cl.**[4] **G02F 1/133**; G02B 27/00

[52] **U.S. Cl.** ..... **350/338**; 350/276 SL

[58] **Field of Search** 350/276 R-277, 350/338, 345

[56] **References Cited**

U.S. PATENT DOCUMENTS

3,905,682	9/1975	Meyerhofer	350/338
4,090,219	5/1978	Ernstoff et al.	350/331 R
4,124,279	11/1978	Byles	350/345
4,222,634	9/1980	Muchel	350/276 SL

FOREIGN PATENT DOCUMENTS

2358415	11/1973	Fed. Rep. of Germany	350/338
0001016	3/1983	PCT Int'l Appl.	350/334

Primary Examiner—Stanley D. Miller
Assistant Examiner—David Lewis
Attorney, Agent, or Firm—Flehr, Hohbach, Test, Albritton, & Herbert

[57] **ABSTRACT**

A display comprising optical means for presenting an absence of light over a controlled viewing angle and means for selectively scattering or transmitting light in response to a prescribed input to effect a display of information within said viewing angle.
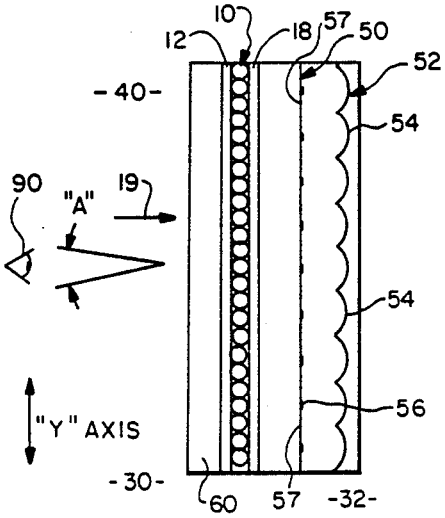
13 Claims, 2 Drawing Sheets