US006871402B2

(12) **United States Patent**
**Bader et al.**

(10) **Patent No.: US 6,871,402 B2**
(45) **Date of Patent: Mar. 29, 2005**

(54) **ELECTRICALLY DRIVEN HAIR REMOVAL DEVICE**

(75) Inventors: **Raoul Bader**, Mainz (DE); **Mattias Gradl**, Sesslach (DE); **Sebastian Hottenrott**, Idstein (DE); **Peter Junk**, Seelenberg (DE); **Christof Kleemann**, Eschborn (DE); **Michael Meiss**, Friedberg (DE); **Uwe Neumann**, Wiesbaden (DE); **Michael Odemer**, Niddatal-Assenheim (DE); **Andreas Rehklau**, Coburg (DE); **Jens Storkel**, Frankfurt (DE); **Petri Toivanen**, Kopenhagen (DE); **Till Winkler**, Kronberg (DE); **Jurgen Wolf**, Kriftel (DE)

(73) Assignee: **Braun GmbH**, Kronberg

( * ) Notice: Subject to any disclaimer, the term of this patent is extended or adjusted under 35 U.S.C. 154(b) by 9 days.

(21) Appl. No.: **10/311,044**

(22) PCT Filed: **Oct. 13, 2001**

(86) PCT No.: **PCT/EP01/11863**

§ 371 (c)(1),
(2), (4) Date: **May 7, 2003**

(87) PCT Pub. No.: **WO02/34481**

PCT Pub. Date: **May 2, 2002**

(65) **Prior Publication Data**

US 2003/0167638 A1 Sep. 11, 2003

(30) **Foreign Application Priority Data**

Oct. 20, 2000 (DE) ..... 100 52 127

(51) **Int. Cl.**[7] ..... **B26B 19/46**
(52) **U.S. Cl.** ..... **30/43.92**; 30/537; 362/115
(58) **Field of Search** ..... 362/115; 30/43.92, 30/34.05, 537

(56) **References Cited**

U.S. PATENT DOCUMENTS

| | | | | | |
|---|---|---|---|---|---|
| 2,595,287 | A | * | 5/1952 | Perry | 362/115 |
| 2,965,748 | A | * | 12/1960 | Bonanno | 362/115 |
| 3,473,106 | A | * | 10/1969 | Grabl | 323/277 |
| 3,604,915 | A | * | 9/1971 | Wahl | 362/115 |
| 3,770,950 | A | | 11/1973 | Brenneman et al. | 362/115 |
| 4,094,062 | A | * | 6/1978 | Papanikolaou | 30/34.05 |
| 4,719,698 | A | * | 1/1988 | Ninomiya et al. | 30/43.6 |
| 4,733,468 | A | * | 3/1988 | Zadro | 30/34.05 |
| 5,065,515 | A | * | 11/1991 | Iderosa | 30/140 |
| 5,299,104 | A | * | 3/1994 | Parmentier | 362/115 |
| 5,582,476 | A | * | 12/1996 | Hansen | 362/115 |
| 5,606,798 | A | * | 3/1997 | Kelman | 30/41.5 |
| 5,632,087 | A | * | 5/1997 | Motohashi et al. | 30/43.92 |
| 5,794,342 | A | * | 8/1998 | Davey | 30/45 |
| 5,920,988 | A | * | 7/1999 | Momose | 30/41 |
| 5,946,806 | A | * | 9/1999 | Watanabe et al. | 30/43.92 |
| 5,970,616 | A | * | 10/1999 | Wahl et al. | 30/216 |
| 5,993,440 | A | * | 11/1999 | Ghassemi | 606/9 |
| 6,073,348 | A | * | 6/2000 | Shiba | 30/34.1 |
| 6,227,676 | B1 | * | 5/2001 | Sneddon | 362/115 |
| 6,460,251 | B1 | * | 10/2002 | Orloff | 30/41.7 |
| 6,533,775 | B1 | * | 3/2003 | Rizoiu | 608/9 |

FOREIGN PATENT DOCUMENTS

| | | |
|---|---|---|
| DE | 72 23 118 | 12/1972 |
| DE | 23 49 393 | 4/1975 |
| DE | 77 28 867 | 2/1978 |
| DE | 79 36 716 | 4/1980 |
| DE | 196 01 780 C1 | 6/1997 |
| EP | 0 069 468 | 1/1983 |
| GB | 2 100 647 A | 1/1983 |

* cited by examiner

*Primary Examiner*—Charles Goodman
(74) *Attorney, Agent, or Firm*—Fish & Richardson P.C.

(57) **ABSTRACT**

An electrically operated hair removing device, comprising a housing, an operating system connected to the housing for clipping and/or plucking hair, the system having at least two operating elements which are movable relative to one another and at least one of which is driven, and an illumination device for illuminating the operating system, the illumination device being integrated in at least one of the operating elements.
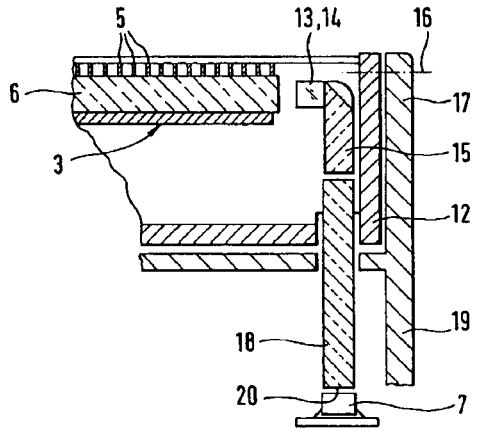
**16 Claims, 5 Drawing Sheets**