US009570002B2

(12) **United States Patent**
Sakariya et al.

(10) **Patent No.: US 9,570,002 B2**
(45) **Date of Patent: Feb. 14, 2017**

(54) **INTERACTIVE DISPLAY PANEL WITH IR DIODES**

(71) Applicant: **LuxVue Technology Corporation**, Santa Clara, CA (US)

(72) Inventors: **Kapil V. Sakariya**, Sunnyvale, CA (US); **Tore Nauta**, Los Gatos, CA (US)

(73) Assignee: **Apple Inc.**, Cupertino, CA (US)

(*) Notice: Subject to any disclaimer, the term of this patent is extended or adjusted under 35 U.S.C. 154(b) by 0 days.

(21) Appl. No.: **14/307,336**

(22) Filed: **Jun. 17, 2014**

(65) **Prior Publication Data**

US 2015/0364107 A1 Dec. 17, 2015

(51) **Int. Cl.**

G09G 3/3225	(2016.01)
G09G 3/32	(2016.01)
G06F 3/041	(2006.01)
G06F 3/042	(2006.01)

(52) **U.S. Cl.**

CPC ***G09G 3/3225*** (2013.01); ***G06F 3/042*** (2013.01); ***G06F 3/0412*** (2013.01); *G09G 2300/04* (2013.01); *G09G 2300/0809* (2013.01); *G09G 2320/0626* (2013.01); *G09G 2320/0686* (2013.01); *G09G 2358/00* (2013.01); *G09G 2360/144* (2013.01); *G09G 2360/148* (2013.01); *G09G 2370/08* (2013.01)

(58) **Field of Classification Search**

None

See application file for complete search history.

(56) **References Cited**

U.S. PATENT DOCUMENTS

3,717,743	A	2/1973	Costello	
3,935,986	A	2/1976	Lattari et al.	
4,618,814	A	10/1986	Kato et al.	
5,131,582	A	7/1992	Kaplan et al.	
5,378,926	A	1/1995	Chi et al.	
5,435,857	A	7/1995	Han et al.	
5,448,082	A *	9/1995	Kim	257/82

(Continued)

FOREIGN PATENT DOCUMENTS

EP	1 694 099 A2	8/2006
JP	07-060675 A	3/1995

(Continued)

OTHER PUBLICATIONS

Asano, Kazutoshi, et al., "Fundamental Study of an Electrostatic Chuck for Silicon Wafer Handling" IEEE Transactions on Industry Applications, vol. 38, No. 3, May/Jun. 2002, pp. 840-845.

(Continued)

Primary Examiner — Kathy Wang-Hurst
Assistant Examiner — Matthew Yeung
(74) *Attorney, Agent, or Firm* — Blakely, Sokoloff, Taylor & Zafman LLP

(57) **ABSTRACT**

Exemplary methods and systems use a micro light emitting diode (LED) in an active matrix display to emit light and a sensing IR diode to sense light. A display panel includes a display substrate having a display region, an array of subpixel circuits, and an array of selection devices. Each subpixel circuit includes a driving circuit to operate a corresponding infrared (IR) emitting LED in a light emission mode. Each selection device may be coupled to a corresponding sensing IR diode to operate the corresponding sensing IR diode in a light sensing mode.
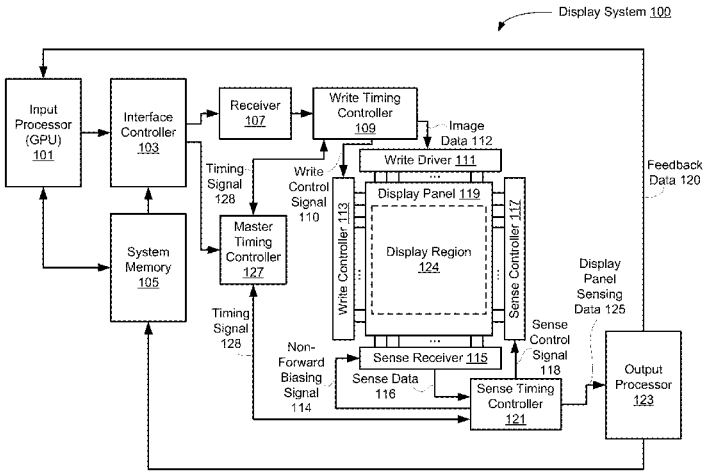
20 Claims, 28 Drawing Sheets