US005169602A

United States Patent [19]

Pang et al.

[11] Patent Number: 5,169,602

[45] Date of Patent: Dec. 8, 1992

[54] RESEALABLE CONDUIT AND METHOD

[75] Inventors: **Wing S. Pang**, Hacienda Heights, Calif.; **Thomas L. Kraft; James W. Meador**, both of Houston, Tex.

[73] Assignee: **Beckman Instruments, Inc.**, Fullerton, Calif.

[21] Appl. No.: **490,051**

[22] Filed: **Mar. 7, 1990**

[51] **Int. Cl.**[5] **B65D 39/00**

[52] **U.S. Cl.** **422/103**; 422/99; 422/100; 604/411; 222/83.5; 215/DIG. 3; 215/247; 215/260; 215/307; 73/863.81

[58] **Field of Search** 422/99, 100, 103; 604/411; 222/83.5; 215/DIG. 3, 247, 260, 307; 73/863.81

[56] **References Cited**

U.S. PATENT DOCUMENTS

3,119,391	1/1964	Harrison	604/411 X
3,460,702	8/1969	Andrews	215/247
3,849,070	11/1974	Garza et al.	436/133
3,930,413	1/1976	Laird et al.	73/863.85
4,020,837	5/1977	Larson	604/411
4,134,512	1/1979	Nugent	215/247
4,351,798	9/1982	Marsoner et al.	422/63
4,423,641	1/1984	Ottung	73/863.86
4,515,752	5/1985	Miramanda	422/99
4,537,593	8/1985	Alchas	604/411
4,808,381	2/1989	McGregor et al.	422/100
4,935,020	6/1990	Brodén	604/411

OTHER PUBLICATIONS

CleanTech Literature, "CleanTech System", Anonymous.

Helena Laboratories Literature Describing Tip Tops, 1988.

Primary Examiner—Robert J. Warden
Assistant Examiner—Stephanie Blythe
Attorney, Agent, or Firm—William H. May; Gary T. Hampson; Charles Berman

[57] **ABSTRACT**

A resealable conduit is used to remove or add fluid to a closed system without coring or contamination of the fluid. The conduit can include funnel-shaped guide means, duck bill valve means and beveled tip puncturing means. A conduit resting angle of less than about five degrees can be achieved. A tip bevel angle between about ten and twenty degrees is preferred. The beveled tip can have a rotated or twisted blade surface extension. A blade surface extension formed with a ninety degree rotation of the blade surface is preferred. Alternately, the puncturing means can include a needle point or a flat cutting surface.
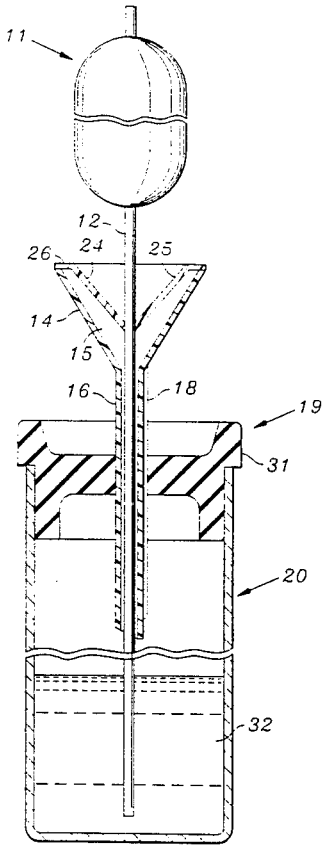
32 Claims, 5 Drawing Sheets