Sept. 23, 1969 H. ROSEN 3,468,602

CONTACT LENS WITH FLEXIBLE CENTRAL PORTION

Filed July 11, 1966 2 Sheets-Sheet 1

FIG.6.

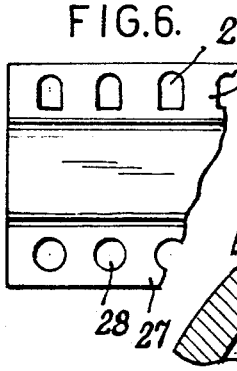

FIG.1.

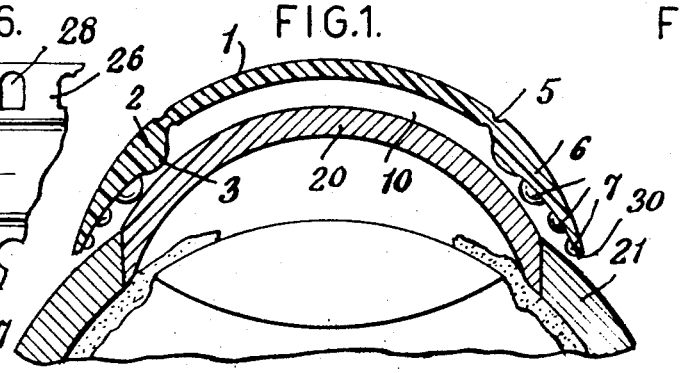

FIG.7.

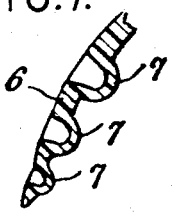

FIG.2.

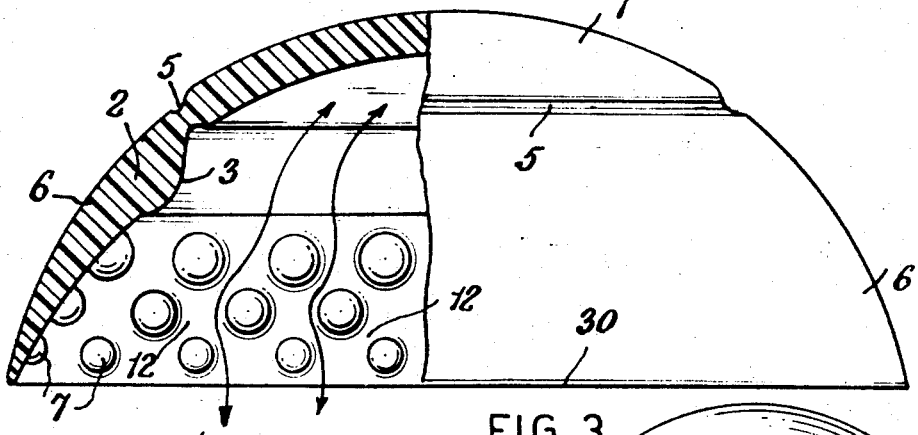

FIG.4.

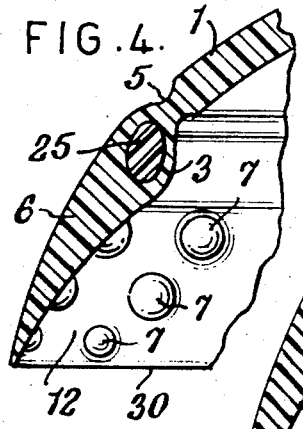

FIG.5.

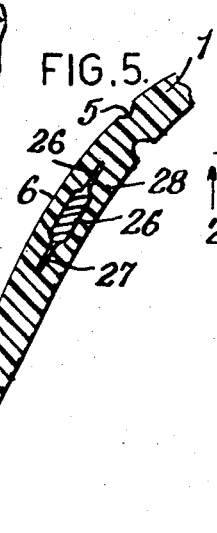

FIG.3.

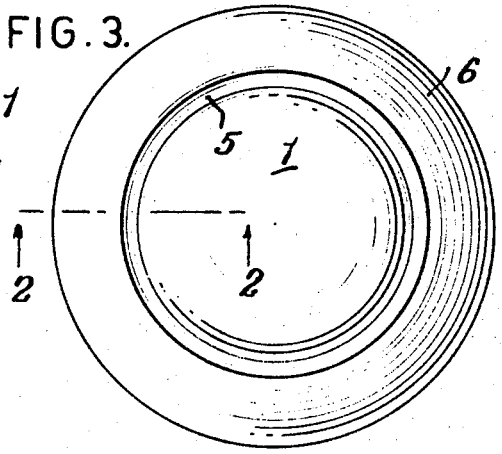

INVENTOR.
Hyman Rosen
BY
[signature]
Attorney