Jan. 12, 1937. A. DORFMAN 2,067,602

TOILET MIRROR

Filed Oct. 25, 1935

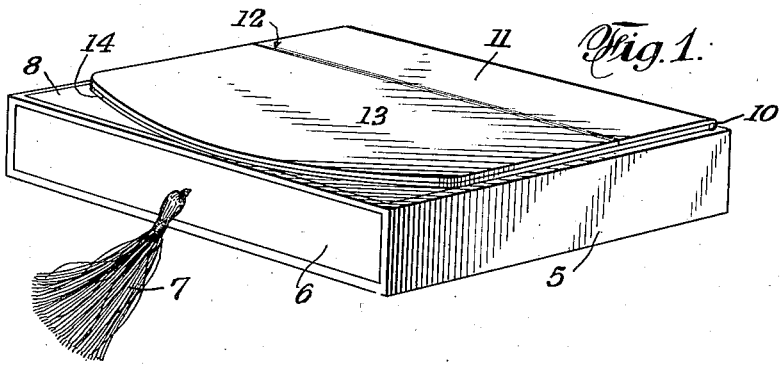

Fig. 1.

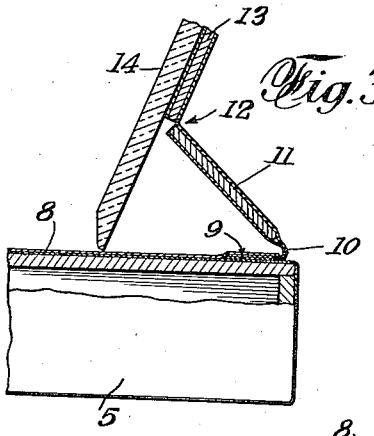

Fig. 3.

Fig. 2.

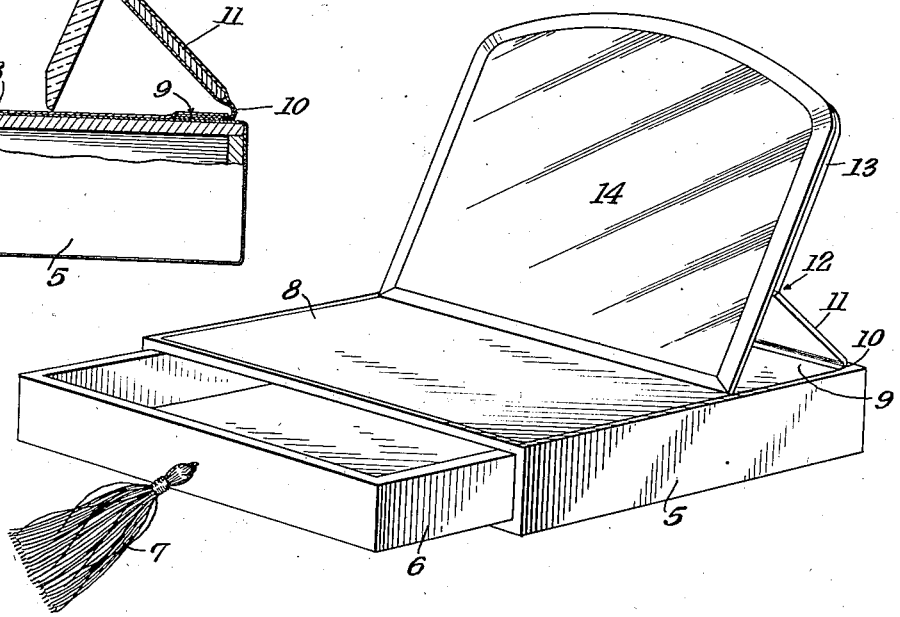

INVENTOR
ADOLPH DORFMAN
BY
Evarts, Lemlein + Walsky
ATTORNEYS