US005964802A

United States Patent [19]

Anello et al.

[11] **Patent Number: 5,964,802**

[45] **Date of Patent: Oct. 12, 1999**

[54] **ADJUSTABLE INTRAOCULAR LENS**

[75] Inventors: **Robert Anello**, Marina del Rey, Calif.; **Ali Amiry**, Chicago, Ill.

[73] Assignee: **Quantum Vision, Inc.**, Chicago, Ill.

[21] Appl. No.: **09/018,402**

[22] Filed: **Feb. 4, 1998**

Related U.S. Application Data

[62] Division of application No. 08/592,845, Jan. 22, 1996, Pat. No. 5,728,155.

[51] **Int. Cl.**[6] **A61F 2/16**

[52] **U.S. Cl.** **623/6**

[58] **Field of Search** 523/6

[56] **References Cited**

U.S. PATENT DOCUMENTS

4,249,271	2/1981	Poler .	
4,268,921	5/1981	Kelman .	
4,512,039	4/1985	Lieberman .	
4,573,998	3/1986	Mazzocco .	
4,575,373	3/1986	Johnson .	
4,619,662	10/1986	Juergens, Jr. .	
4,638,056	1/1987	Callahan .	
4,685,920	8/1987	Fritch .	
4,685,921	8/1987	Peyman .	
4,693,716	9/1987	Mackool .	
4,693,717	9/1987	Michelson .	
4,702,244	10/1987	Mazzocco .	
4,709,996	12/1987	Michelson .	
4,710,193	12/1987	Volk .	
4,713,072	12/1987	Bowald .	
4,715,373	12/1987	Mazzocco .	
4,720,286	1/1988	Bailey .	
4,725,278	2/1988	Shearing	623/6
4,731,078	3/1988	Stoy .	
4,764,169	8/1988	Gerndahl .	
4,769,034	9/1988	Poley .	
4,787,903	11/1988	Grendahl .	
4,790,847	12/1988	Woods .	
4,813,954	3/1989	Siepser .	
4,816,031	3/1989	Pfoff .	
4,819,631	4/1989	Poley .	
4,822,359	4/1989	Tano .	
4,842,601	6/1989	Smith .	
4,878,910	11/1989	Koziol et al. .	
4,888,012	12/1989	Horn .	
4,932,966	6/1990	Christie .	
4,955,904	9/1990	Atebara .	
4,994,082	2/1991	Richards .	
5,066,301	11/1991	Wiley .	
5,108,429	4/1992	Wiley .	
5,171,266	12/1992	Wiley .	
5,171,319	12/1992	Keates .	
5,173,723	12/1992	Volk .	
5,178,622	1/1993	LEhmer .	
5,203,668	4/1993	Marmur .	
5,203,788	4/1993	Wiley	623/6
5,222,981	6/1993	Werblin .	
5,275,624	1/1994	Hara .	
5,288,293	2/1994	O'Donnell, Jr. .	
5,290,892	3/1994	Namdaran .	
5,300,115	4/1994	Py .	
5,326,347	7/1994	Cumming .	
5,326,348	7/1994	Nordan .	
5,344,447	9/1994	Swanson .	
5,344,448	9/1994	Schneider .	
5,358,520	10/1994	Patel .	
5,384,606	1/1995	Koch .	
5,391,202	2/1995	Lipshitz .	
5,443,506	8/1995	Garabet .	
5,466,260	11/1995	Silvestrini .	

OTHER PUBLICATIONS

Martin et al, editors, Foldable Intraocular Lenses, 1993, Chapters 5–7, and 9.

Sabbagh, Leslie, "Multipiece IOL Seen as Refractive Tool," Ophthalmology Times, Jan. 30–Feb. 5, 1995, p. 14.

Primary Examiner—Michael J. Milano
Attorney, Agent, or Firm—Niro, Scavone,Haller & Niro

[57] **ABSTRACT**

Improved adjustable intraocular lenses are disclosed, in which the optic(s) can be rotated post-operatively using manual methods; controlled pulses of laser radiation or micromotors to achieve improved focus and astigmatic correction.
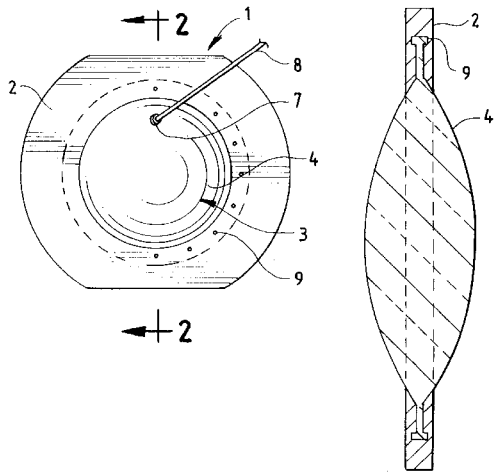
4 Claims, 5 Drawing Sheets