US008258502B2

(12) **United States Patent**
Yoshitake et al.

(10) **Patent No.: US 8,258,502 B2**
(45) **Date of Patent: Sep. 4, 2012**

(54) **LIGHT EMITTING DEVICE ENCAPSULATED WITH SILICONES AND CURABLE SILICONE COMPOSITIONS FOR PREPARING THE SILICONES**

(75) Inventors: **Makoto Yoshitake**, Funabashi (JP); **Masashi Murakami**, Fukuyama (JP); **Yoshitsugu Morita**, Ichihara (JP); **Tomoko Kato**, Ichihara (JP); **Hiroji Enami**, Ichihara (JP); **Masayoshi Terada**, Ichihara (JP); **Brian Harkness**, Midland, MI (US); **Tammy Cheng**, Flushing, NY (US); **Michelle Cummings**, Midland, MI (US); **Ann Norris**, Midland, MI (US); **Malinda Howell**, Midland, MI (US)

(73) Assignee: **Dow Corning Corporation**, Midland, MI (US)

(*) Notice: Subject to any disclaimer, the term of this patent is extended or adjusted under 35 U.S.C. 154(b) by 391 days.

(21) Appl. No.: **12/223,133**

(22) PCT Filed: **Feb. 1, 2007**

(86) PCT No.: **PCT/US2007/002966**

§ 371 (c)(1),
(2), (4) Date: **Jun. 10, 2010**

(87) PCT Pub. No.: **WO2007/100445**

PCT Pub. Date: **Sep. 7, 2007**

(65) **Prior Publication Data**

US 2010/0276721 A1 Nov. 4, 2010

Related U.S. Application Data

(60) Provisional application No. 60/776,575, filed on Feb. 24, 2006.

(51) **Int. Cl.**
H01L 35/24 (2006.01)

(52) **U.S. Cl.** **257/40**; 257/99; 257/E51.001

(58) **Field of Classification Search** 257/40, 257/99, E51.001

See application file for complete search history.

(56) **References Cited**

U.S. PATENT DOCUMENTS

3,159,601	A	12/1964	Ashby et al.
3,220,972	A	11/1965	Lamoreaux et al.
3,296,291	A	1/1967	Chalk et al.
3,419,593	A	12/1968	Willing et al.
3,445,420	A	5/1969	Kookootsedes et al.

(Continued)

FOREIGN PATENT DOCUMENTS

DE 100 52 068 B4 9/2004

(Continued)

OTHER PUBLICATIONS

Seisuki, Tomita, "Pressure-Sensitive Sensor", Patent Abstracts of Japan, Published Apr. 21, 1989.

(Continued)

Primary Examiner — Anthony Ho
(74) *Attorney, Agent, or Firm* — Erika Takeuchi

(57) **ABSTRACT**

A composition includes: (I) an alkenyl functional, phenyl-containing polyorganosiloxane, an Si—H functional phenyl-containing polyorganosiloxane, or a combination thereof; (II) a hydrogendiorganosiloxy terminated oligodiphenylsiloxane having specific molecular weight, an alkenyl-functional, diorganosiloxy-terminated oligodiphenylsiloxane having specific molecular weight, or a combination thereof; and (III) a hydrosilylation catalyst. A light emitting device is made by applying the composition onto a light source followed by curing. The composition provides a cured material with mechanical properties suited for use as an encapsulant for a light emitting device.
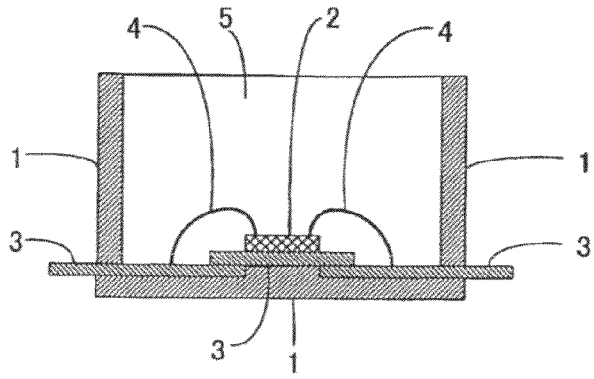
19 Claims, 1 Drawing Sheet