Apr. 24, 1923. 1,452,702

E. H. PIPE

STUCCO MIXING MACHINE

Filed June 28, 1920 4 Sheets-Sheet 3

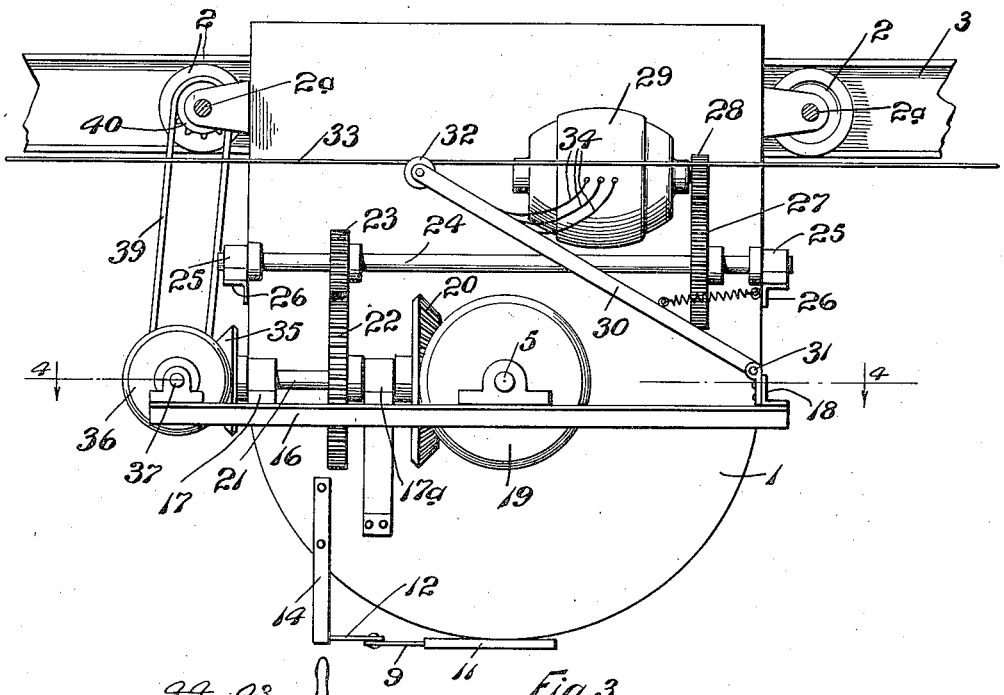

Fig. 3.

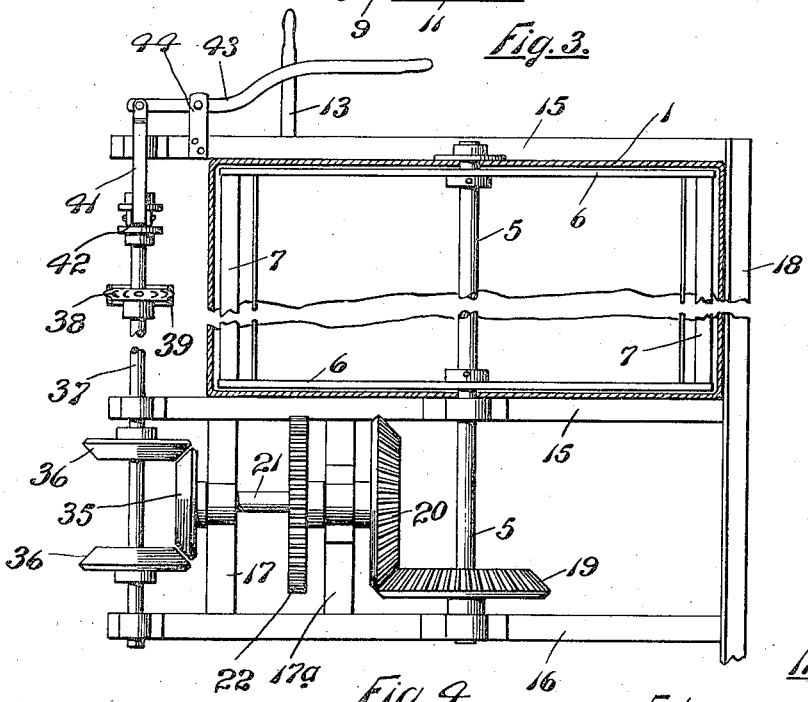

Fig. 4.

Inventor
Edward H. Pipe
By Frank E. Lorrance, Jr.
Attorney