US009636902B2

(12) **United States Patent**
Abbott, Jr. et al.

(10) **Patent No.: US 9,636,902 B2**
(45) **Date of Patent: May 2, 2017**

(54) **FILM STACK INCLUDING ADHESIVE LAYER**

(71) Applicant: **HEWLETT-PACKARD DEVELOPMENT COMPANY, LP**, Fort Collins, CO (US)

(72) Inventors: **James Elmer Abbott, Jr.**, Corvallis, OR (US); **Peter Mardilovich**, Corvallis, OR (US); **Randy Hoffman**, Corvallis, OR (US)

(73) Assignee: **HEWLETT-PACKARD DEVELOPMENT COMPANY, L.P.**, Houston, TX (US)

(*) Notice: Subject to any disclaimer, the term of this patent is extended or adjusted under 35 U.S.C. 154(b) by 69 days.

(21) Appl. No.: **13/873,932**

(22) Filed: **Apr. 30, 2013**

(65) **Prior Publication Data**

US 2014/0322523 A1 Oct. 30, 2014

(51) **Int. Cl.**

H01L 41/18	(2006.01)
B32B 38/08	(2006.01)
B41J 2/16	(2006.01)
H01L 41/08	(2006.01)
H01L 41/09	(2006.01)
B41J 2/14	(2006.01)
B32B 37/12	(2006.01)
B32B 37/24	(2006.01)
B32B 38/00	(2006.01)

(52) **U.S. Cl.**

CPC ***B32B 38/08*** (2013.01); ***B32B 37/12*** (2013.01); ***B41J 2/14233*** (2013.01); ***B41J 2/161*** (2013.01); ***B41J 2/1623*** (2013.01); ***B41J 2/1642*** (2013.01); ***B41J 2/1646*** (2013.01); ***H01L 41/0815*** (2013.01); ***H01L 41/0973*** (2013.01); *B32B 2037/246* (2013.01); *B32B 2038/0092* (2013.01); *B32B 2311/00* (2013.01); *Y10T 156/10* (2015.01); *Y10T 428/265* (2015.01); *Y10T 428/266* (2015.01)

(58) **Field of Classification Search**

None

See application file for complete search history.

(56) **References Cited**

U.S. PATENT DOCUMENTS

6,398,349	B1	6/2002	Murai	
6,929,349	B2	8/2005	Bell et al.	
2003/0022403	A1 *	1/2003	Shimoda et al.	438/14
2005/0104479	A1 *	5/2005	Xu et al.	310/334
2012/0092290	A1 *	4/2012	Itoh et al.	345/174
2012/0184066	A1	7/2012	Yano et al.	

OTHER PUBLICATIONS

Schlatmann et.al.Applied Physics Letters, 69, 1764-1766 (1996).*

Biswas et.al. Materials Letters 57,2326-2332 (2003).*

Liu, P.C. et al.; "The Feasibility of Wafer Bonding by Indium Tin Oxide Intermediate Layer for Light Emitting Diodes"; Nov. 13, 2002; http://www.electrochem.ora/dl/ma/203/pdfs/1029.pdf.

Zhu, Z. et al.; "Aluminum-coated Silicon Wafer Bonding with Tin Intermediate Layer"; Feb. 11, 2013; http://nanolithography.spiedigitallibrary.org/article.aspx?articleid=1570178.

* cited by examiner

Primary Examiner — Vera Katz

(74) *Attorney, Agent, or Firm* — HP Inc—Patent Department

(57) **ABSTRACT**

An example provides an apparatus including a substrate, a metal layer, and an adhesive layer adhered between the substrate and the metal layer, the adhesive layer comprising indium oxide, tin oxide, gallium oxide, indium-tin oxide, indium-gallium oxide, tin-gallium oxide, or indium-tin-gallium oxide.
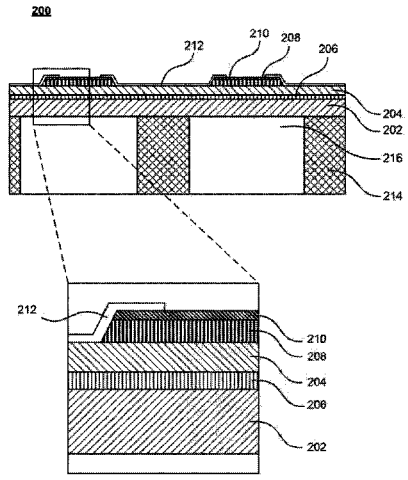
13 Claims, 4 Drawing Sheets