US008136402B2

(12) **United States Patent**
Cato

(10) **Patent No.: US 8,136,402 B2**
(45) **Date of Patent: Mar. 20, 2012**

(54) **ACCELEROMETER MODULE FOR USE WITH A TOUCH SENSITIVE DEVICE**

(75) Inventor: **Robert Thomas Cato**, Raleigh, NC (US)

(73) Assignee: **International Business Machines Corporation**, Armonk, NY (US)

(*) Notice: Subject to any disclaimer, the term of this patent is extended or adjusted under 35 U.S.C. 154(b) by 844 days.

(21) Appl. No.: **11/946,521**

(22) Filed: **Nov. 28, 2007**

(65) **Prior Publication Data**

US 2009/0133499 A1 May 28, 2009

(51) **Int. Cl.**
G01P 15/02 (2006.01)

(52) **U.S. Cl.** **73/548**; 73/514.16

(58) **Field of Classification Search** 73/514.16, 73/548; 702/141
See application file for complete search history.

(56) **References Cited**

U.S. PATENT DOCUMENTS

5,801,313	A	9/1998	Horibata et al.	
6,160,540	A *	12/2000	Fishkin et al.	345/184
6,196,067	B1	3/2001	Martin et al.	
6,243,074	B1 *	6/2001	Fishkin et al.	345/156
6,243,075	B1 *	6/2001	Fishkin et al.	345/156
6,268,857	B1 *	7/2001	Fishkin et al.	715/863
6,297,805	B1 *	10/2001	Adler et al.	345/158
6,297,838	B1 *	10/2001	Chang et al.	715/863
6,340,957	B1 *	1/2002	Adler et al.	345/1.3
6,501,529	B1 *	12/2002	Kurihara et al.	349/160
6,610,917	B2 *	8/2003	Ludwig	84/726
6,630,922	B2 *	10/2003	Fishkin et al.	345/156
7,082,578	B1 *	7/2006	Fishkin et al.	715/863
7,489,303	B1 *	2/2009	Pryor	345/173
7,649,671	B2 *	1/2010	Kothari et al.	359/291
2002/0021277	A1 *	2/2002	Kramer et al.	345/156
2003/0076343	A1 *	4/2003	Fishkin et al.	345/701
2006/0132433	A1 *	6/2006	Kramer et al.	345/156
2006/0154216	A1 *	7/2006	Hafez et al.	434/113
2006/0238517	A1 *	10/2006	King et al.	345/173
2007/0279729	A1 *	12/2007	Kothari et al.	359/291
2010/0013775	A1 *	1/2010	Son	345/168

FOREIGN PATENT DOCUMENTS

WO WO 88/04768 6/1998

OTHER PUBLICATIONS

Droge D., Fahey D., Hanna D., Leak D., Mulzet A., White J., Pressure-Sensitive Trackball Device, Oct. 1995, pp. 31-34, vol. 38 No. 10, Charlotte.

* cited by examiner

Primary Examiner — Hezron E Williams
Assistant Examiner — Samir M Shah
(74) *Attorney, Agent, or Firm* — Thomas Tyson; Jeffrey L. Streets

(57) **ABSTRACT**

An accelerometer module for use with a touch sensor on a device, a method of detecting acceleration using a touch sensor, and a computer program product for receiving the touch sensor data and producing output representative of acceleration. The accelerometer module provides a device with a touch sensor, such as a mobile phone, with the ability to sense acceleration, orientation, or both. The accelerometer module may sense acceleration along a single axis or multiple axis. Sensing acceleration along three axis may be useful for producing a handheld game controller or for providing input to many other applications. The accelerometer module applies a force against a deformable member to change the contact area between the deformable member and the touch sensor, wherein the contact area is a function of the amount of applied acceleration.
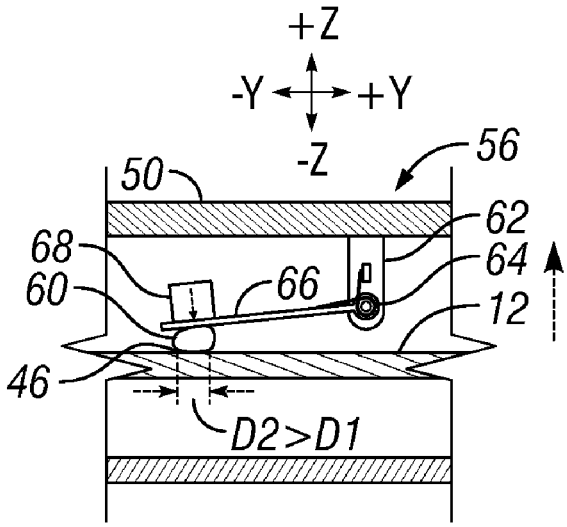
6 Claims, 8 Drawing Sheets