Sept. 19, 1950 E. W. ERICSON 2,523,202

DISPLAY BINDER

Filed Nov. 19, 1947 2 Sheets-Sheet 1

Fig. 1.

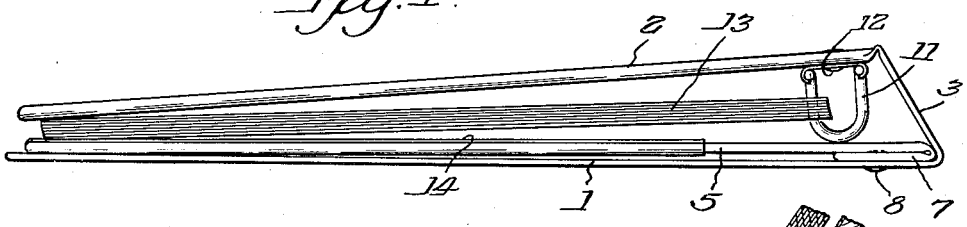

Fig. 2.

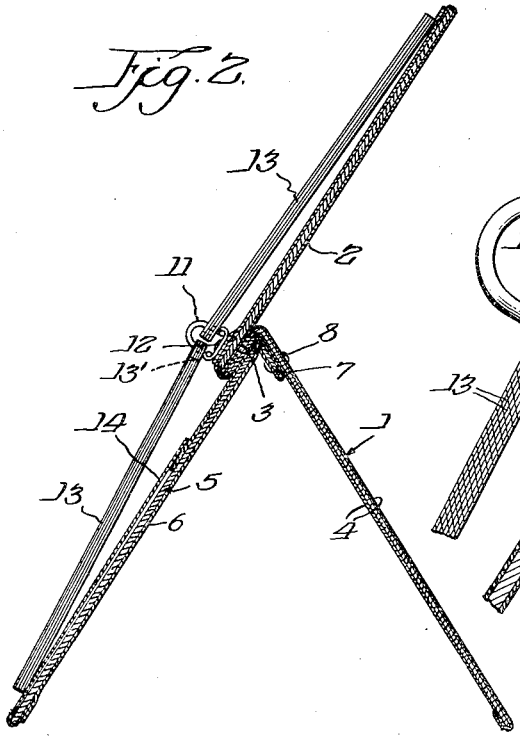

Fig. 3.

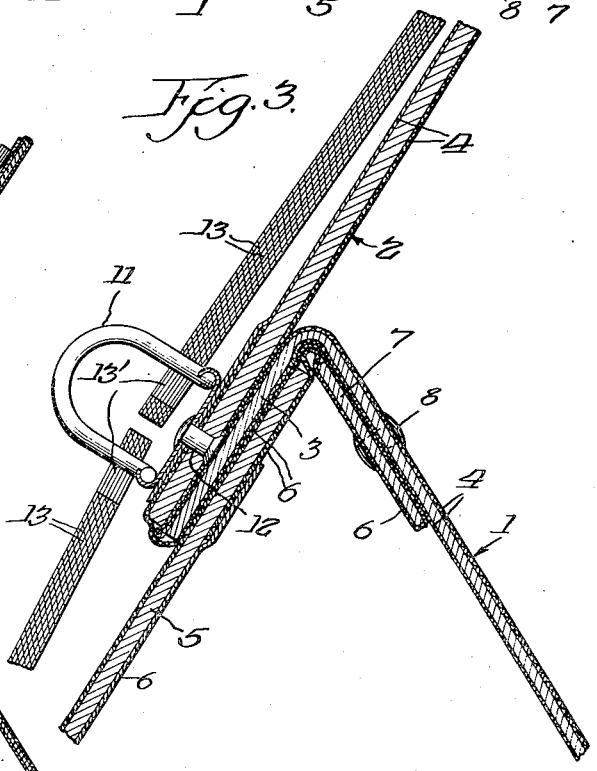

Inventor:
Elmer W. Ericson.

By W. F. Kellogg

Atty.