Nov. 19, 1935. J. SOSS 2,021,702

CONCEALED HINGE

Filed Nov. 28, 1934

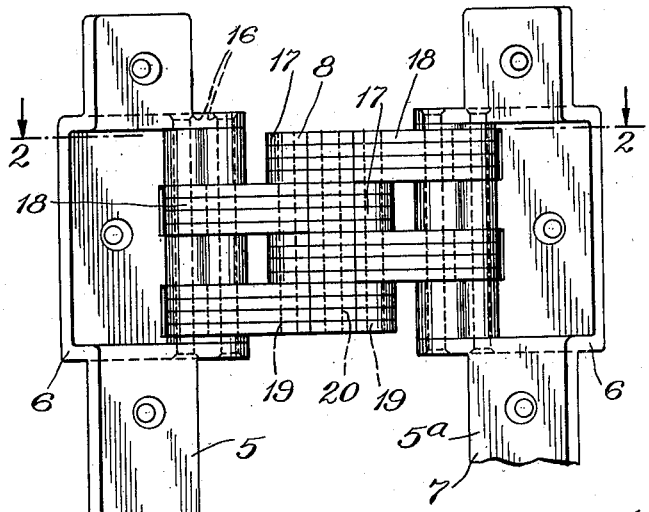

Fig. 1

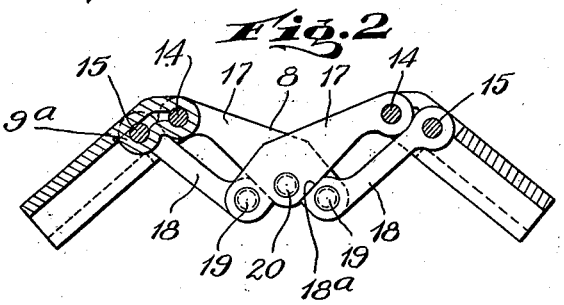

Fig. 2

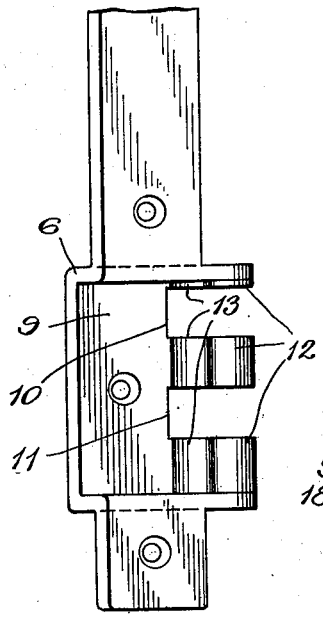

Fig. 3

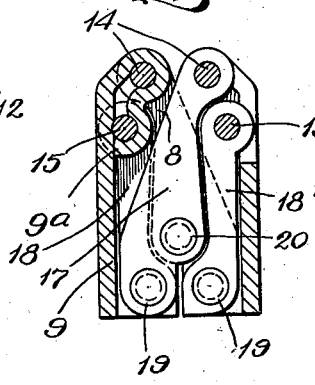

Fig. 4

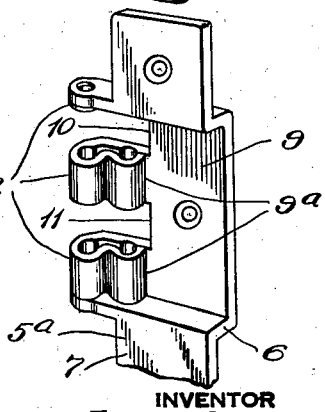

INVENTOR
JOSEPH SOSS
BY
Howard C. Thompson
ATTORNEY