Dec. 9, 1924. 1,518,602

J. D. PEDERSEN

AUTOMATIC PISTOL

Filed March 11, 1920

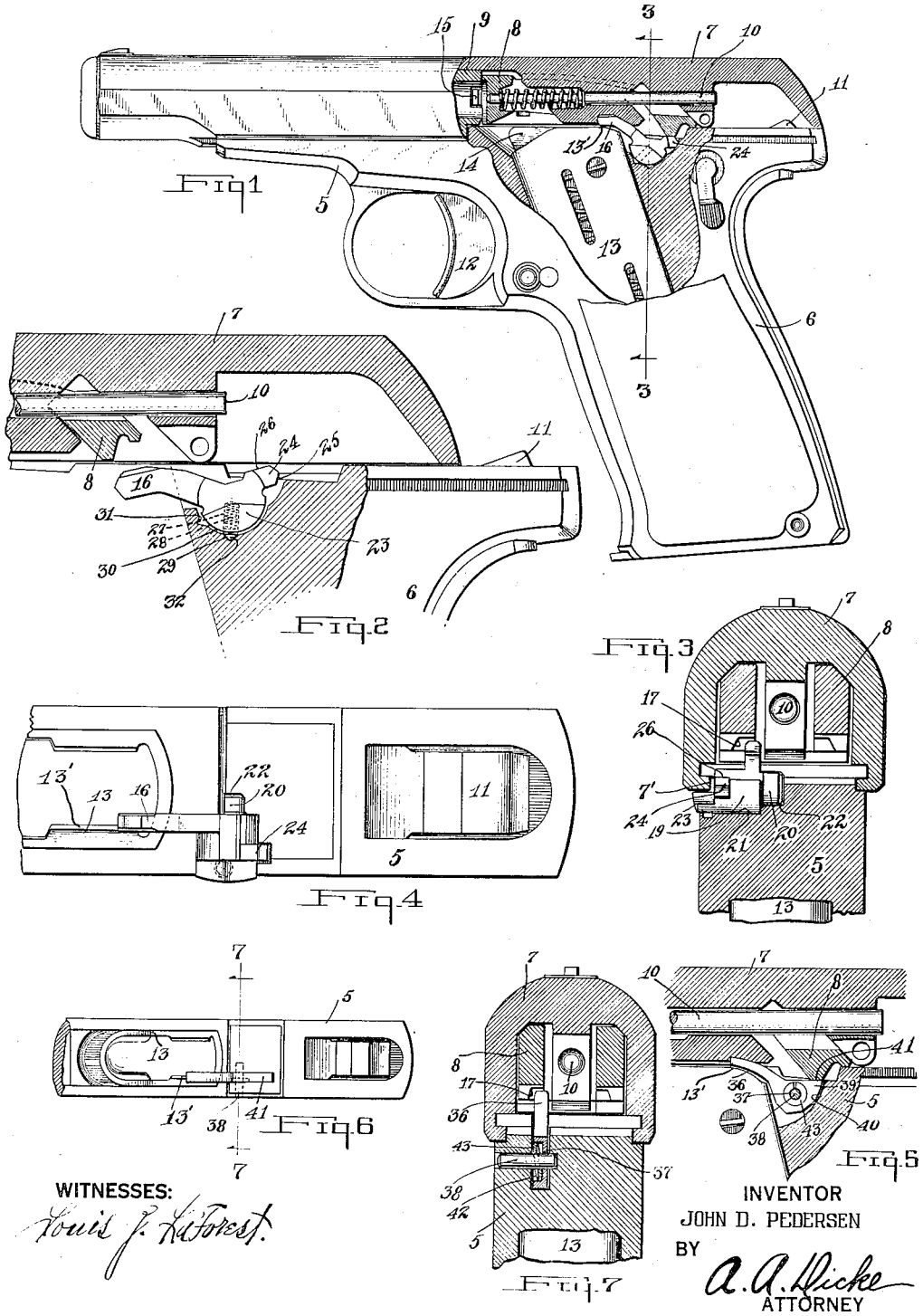

WITNESSES:

Louis J. LaForest.

INVENTOR

JOHN D. PEDERSEN

BY

A. A. Hicke

ATTORNEY