June 30, 1970 L. MERTGEN ET AL 3,518,102

METHOD AND APPARATUS FOR MAKING FOAM BACKED CARPETS

Filed July 9, 1965

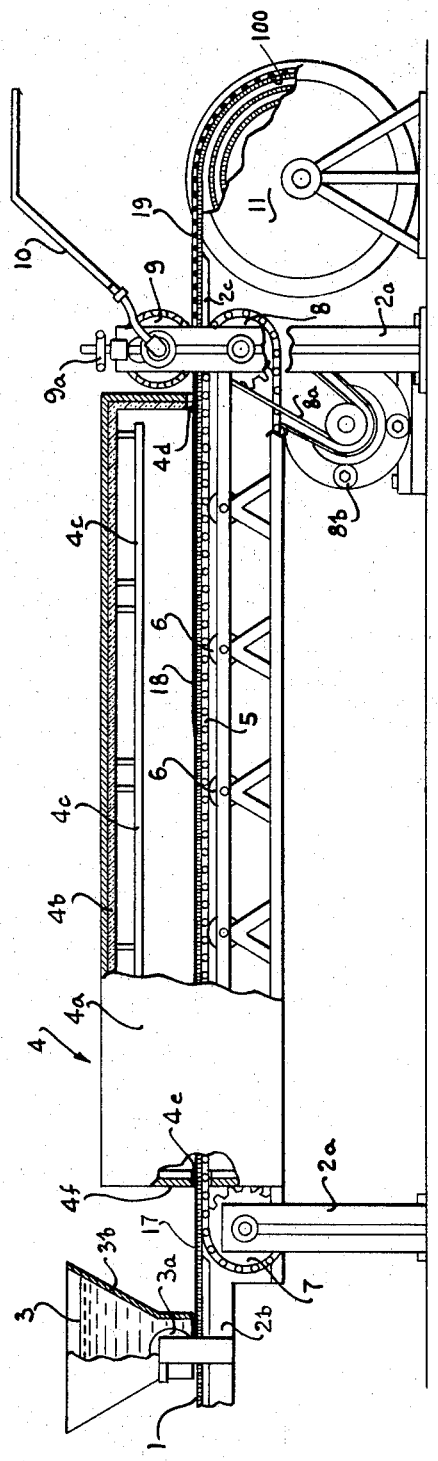

FIG. 1.

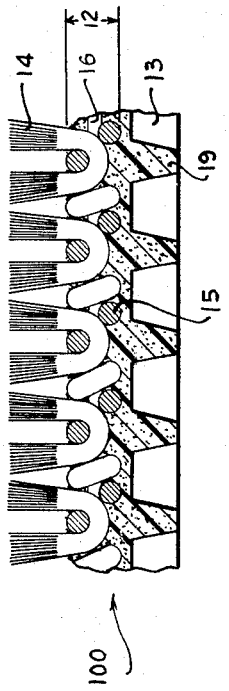

FIG. 2.

INVENTORS
Lothar Mertgen
Joachim Schäbel

BY b/ Michael J. Striker
Atty