United States Patent [19]

Koziol et al.

[11] **Patent Number: 4,615,702**

[45] **Date of Patent: Oct. 7, 1986**

[54] **INTRAOCULAR LENS AND METHOD OF FORMING THE LENS**

[76] Inventors: **Jeffrey E. Koziol,** 601 W. Central, Mount Prospect, Ill. 60056; **Gholam A. Peyman,** 535 N. Michigan Ave., Chicago, Ill. 60611

[21] Appl. No.: **648,600**

[22] Filed: **Sep. 10, 1984**

[51] **Int. Cl.**[4] **A61F 2/16**

[52] **U.S. Cl.** **623/6**

[58] **Field of Search** 623/6

[56] **References Cited**

U.S. PATENT DOCUMENTS

2,834,023	5/1958	Lieb	623/6
4,073,014	2/1978	Poler	623/6
4,159,546	7/1979	Shearing	623/6
4,168,547	9/1979	Konstantinou et al.	623/6
4,172,297	10/1979	Schlegel	623/6
4,206,518	6/1980	Jardon et al.	623/6
4,242,760	1/1981	Rainin	623/6
4,253,200	3/1981	Kelman	623/6
4,257,130	3/1981	Bayers	623/6
4,363,143	12/1982	Callahan	623/6

FOREIGN PATENT DOCUMENTS

2114315	8/1983	United Kingdom	623/6
2124500	2/1984	United Kingdom	623/6

Primary Examiner—Richard J. Apley
Assistant Examiner—James Prizant
Attorney, Agent, or Firm—Roylance, Abrams, Berdo & Goodman

[57] **ABSTRACT**

An intraocular lens formed of a soft, resilient polymeric optical element and a resilient polymeric support having an annular portion embedded in the optical element and a pair of mounting arms extending outwardly of the optical element. The optical element and support can be folded for insertion into the eye via a small incision. The support is embedded in the optical element during molding and polymerization of the optical element.
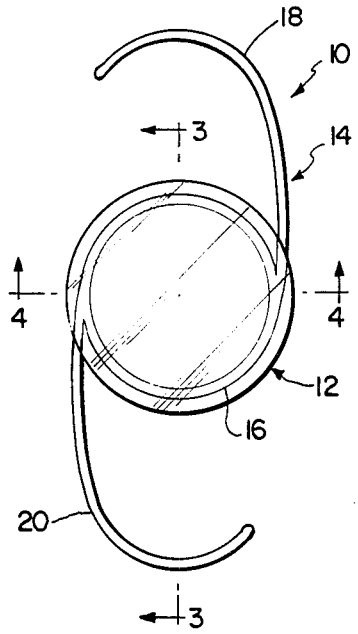
10 Claims, 6 Drawing Figures