FIGURE 1

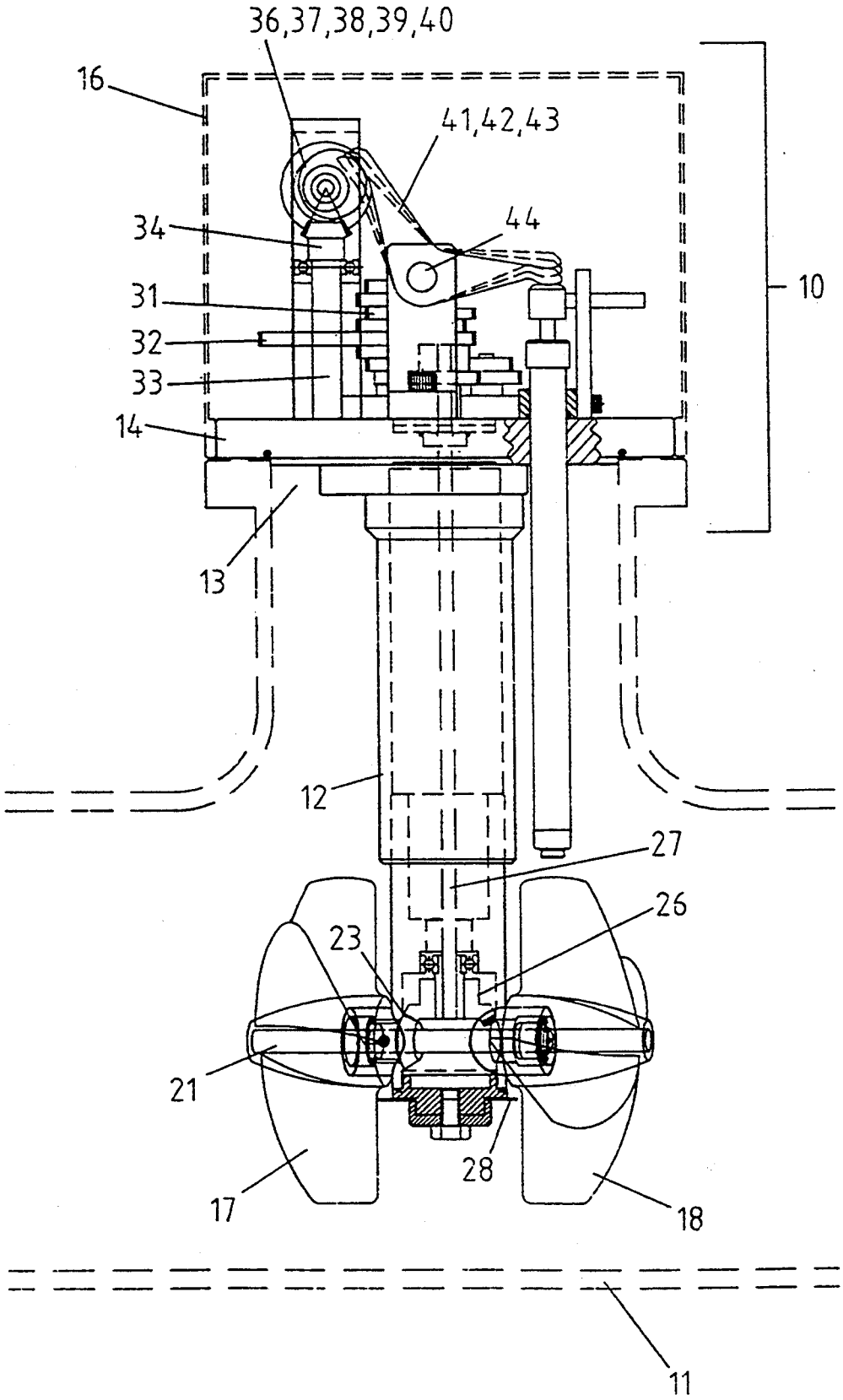
36,37,38,39,40
16
41,42,43
44
34
31
32
33
14
10
13
12
27
26
23
21
28
17
18
11