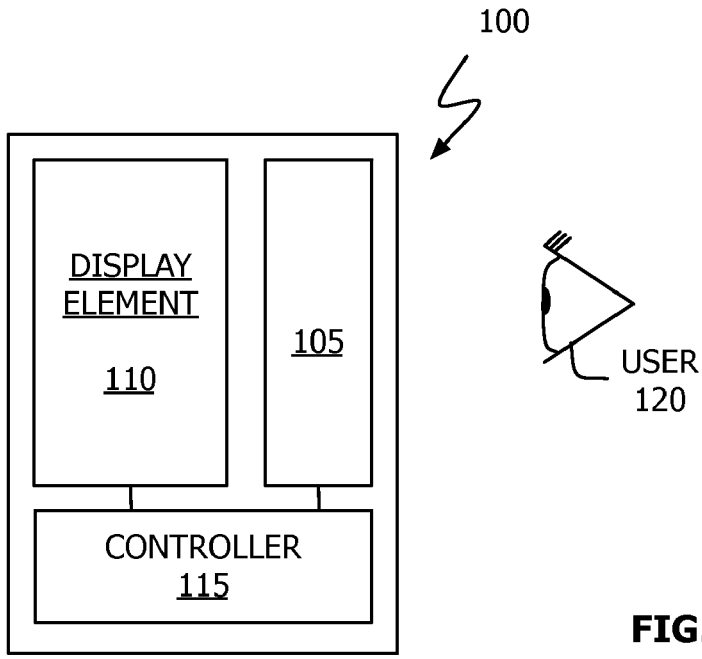
100
DISPLAY ELEMENT
110
105
CONTROLLER
115
USER
120

FIG. 1

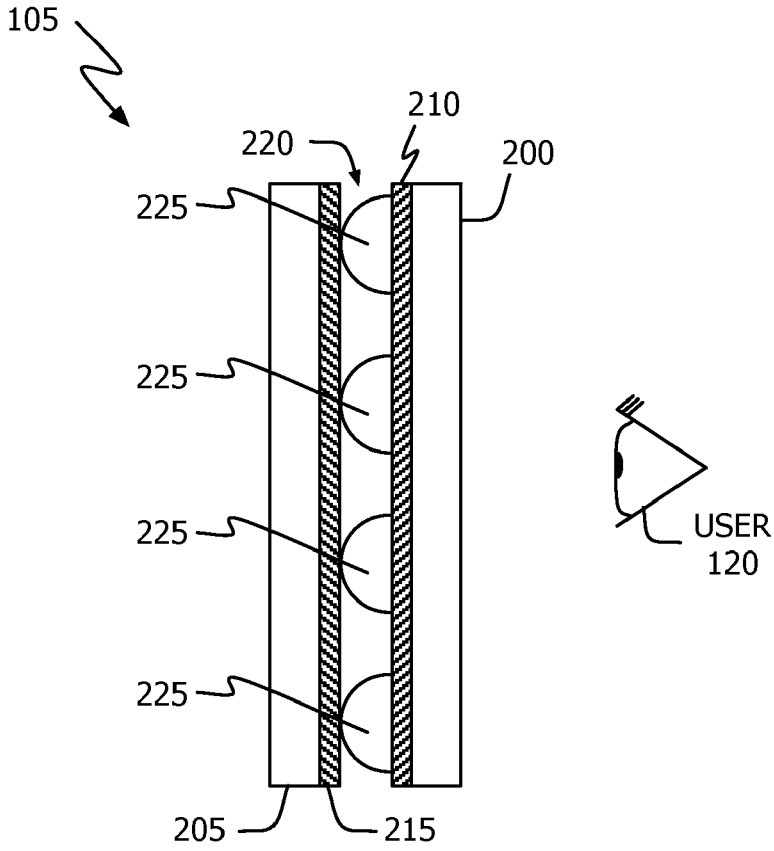
105
210
220
200
225
225
225
225
USER
120
205
215

FIG. 2