ELECTRIC ALARM TIMEPIECE

Filed May 8, 1969

FIG. 1

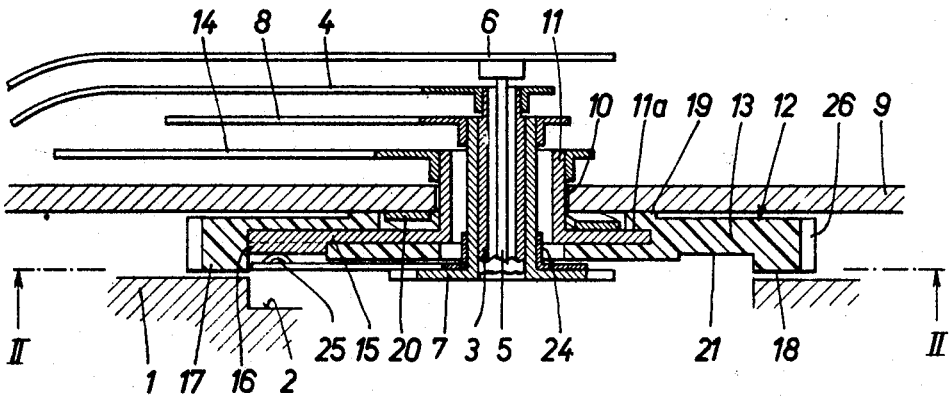
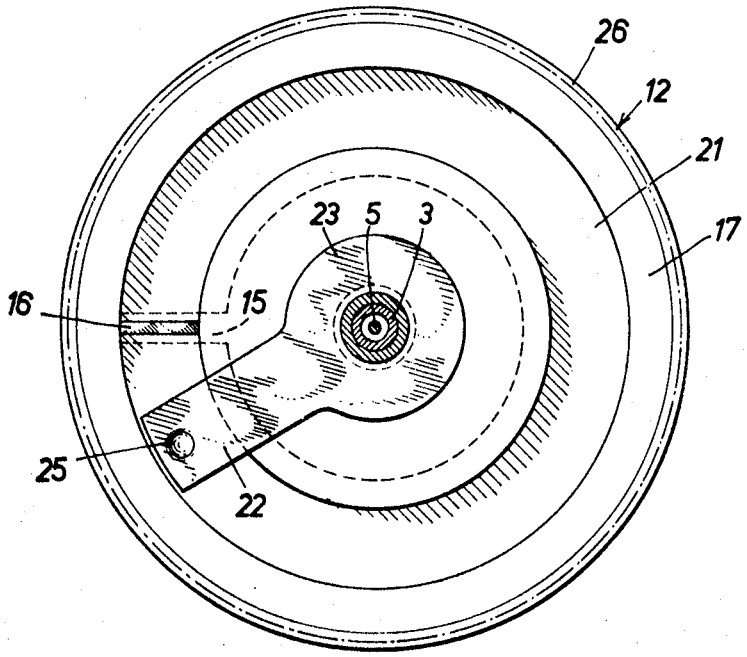
FIG. 2