US009411402B2

(12) **United States Patent**
Ma et al.

(10) **Patent No.: US 9,411,402 B2**
(45) **Date of Patent: Aug. 9, 2016**

(54) **POWER CONTROL SYSTEM AND POWER CONTROL METHOD**

(71) Applicant: **GIGA-BYTE TECHNOLOGY CO., LTD.**, New Taipei (TW)

(72) Inventors: **Mou Ming Ma**, New Taipei (TW); **Chun Kun Lan**, New Taipei (TW); **Yih Neng Lin**, New Taipei (TW)

(73) Assignee: **GIGA-BYTE TECHNOLOGY CO., LTD.**, New Taipei (TW)

(*) Notice: Subject to any disclaimer, the term of this patent is extended or adjusted under 35 U.S.C. 154(b) by 350 days.

(21) Appl. No.: **14/080,310**

(22) Filed: **Nov. 14, 2013**

(65) **Prior Publication Data**

US 2014/0143574 A1 May 22, 2014

(30) **Foreign Application Priority Data**

Nov. 21, 2012 (TW) ..... 101143362 A

(51) **Int. Cl.**

G06F 1/26	(2006.01)
G06F 1/32	(2006.01)
G06F 11/14	(2006.01)

(52) **U.S. Cl.**

CPC ***G06F 1/3234*** (2013.01); ***G06F 1/266*** (2013.01); ***G06F 1/3287*** (2013.01); ***G06F 1/3293*** (2013.01); *G06F 1/3203* (2013.01); *G06F 1/3206* (2013.01); *G06F 11/1417* (2013.01); *Y02B 60/121* (2013.01); *Y02B 60/1282* (2013.01)

(58) **Field of Classification Search**

CPC G06F 1/3203; G06F 1/266; G06F 1/3287; G06F 1/3206; G06F 13/4022

USPC 713/300, 310, 320, 323

See application file for complete search history.

(56) **References Cited**

U.S. PATENT DOCUMENTS

2004/0083397 A1* 4/2004 Chen G06F 1/3203 713/320
2013/0124886 A1* 5/2013 Kung G06F 1/3206 713/320

FOREIGN PATENT DOCUMENTS

TW	201128375 A1	8/2011
TW	201203271 A1	1/2012
TW	201239602 A1	1/2012

* cited by examiner

Primary Examiner — Michael J Brown
(74) *Attorney, Agent, or Firm* — Maschoff Brennan

(57) **ABSTRACT**

A power control system and a power control method are provided. The power control system is adapted to a computer device. The computer device comprises an embedded controller and a power supply both coupled to each other. The power supply provides power to the embedded controller. The power control system comprises a device switch input terminal and a logic output terminal. The device switch input terminal receives a trigger signal from a component of the computer device to change a state of the computer system. The logic output terminal is coupled to the power supply and performs on-off control of the power supply to provide or stop power to the embedded controller when the switch input terminal receives the trigger signal.
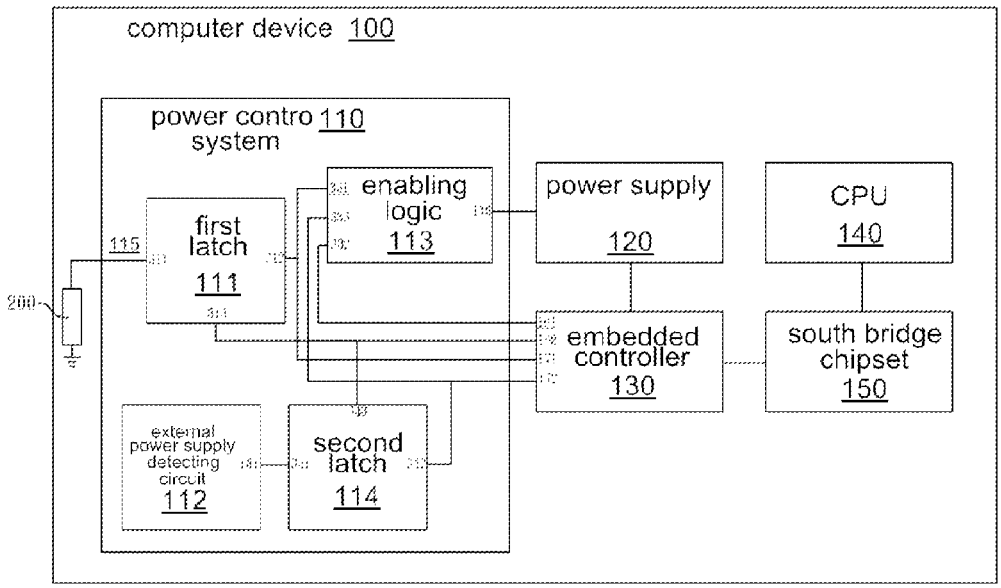
9 Claims, 6 Drawing Sheets