US009409302B2

(12) **United States Patent**
Schnak et al.

(10) **Patent No.: US 9,409,302 B2**
(45) **Date of Patent: Aug. 9, 2016**

(54) **RAZORS**

(71) Applicant: **The Gillette Company**, Boston, MA (US)

(72) Inventors: **Fred Schnak**, Kronberg (DE); **Luis Burrel**, Kettenhofweg (DE); **Stefan Rehbein**, Schumannstr (DE); **Gerrit Roenneberg**, Darmstadt (DE); **Uwe Schaaf**, Alsbach-Hahnlein (DE)

(73) Assignee: **The Gillette Company**, Boston, MA (US)

(*) Notice: Subject to any disclaimer, the term of this patent is extended or adjusted under 35 U.S.C. 154(b) by 486 days.

(21) Appl. No.: **13/966,471**

(22) Filed: **Aug. 14, 2013**

(65) **Prior Publication Data**

US 2014/0026423 A1 Jan. 30, 2014

Related U.S. Application Data

(60) Continuation of application No. 13/445,307, filed on Apr. 12, 2012, now Pat. No. 8,561,301, which is a continuation of application No. 13/191,636, filed on Jul. 27, 2011, now abandoned, which is a continuation of application No. 12/874,762, filed on Sep. 2, 2010, now abandoned, which is a continuation of application No. 11/998,516, filed on Nov. 30, 2007, now Pat. No. 7,810,243, which is a division of application No. 11/220,008, filed on Sep. 6, 2005, now abandoned.

(51) **Int. Cl.**
G05B 11/28 (2006.01)
B26B 21/52 (2006.01)

(52) **U.S. Cl.**
CPC ***B26B 21/526*** (2013.01); *Y10T 29/49004* (2015.01)

(58) **Field of Classification Search**
CPC B26B 21/526
USPC 318/599, 811, 810, 807, 767, 727
See application file for complete search history.

(56) **References Cited**

U.S. PATENT DOCUMENTS

2,963,598	A	12/1960	Kent	
2,993,948	A	7/1961	Vaclaw	
3,611,568	A	10/1971	Alexander et al.	
3,668,356	A	6/1972	Kekas	
3,932,721	A	1/1976	Crowell et al.	
4,094,062	A	6/1978	Papanikolaou	
4,213,078	A	7/1980	Ferrell et al.	
4,549,352	A	10/1985	Ochiai et al.	
4,703,247	A	10/1987	Morioka	
4,744,144	A	5/1988	Lowery et al.	
4,918,818	A	4/1990	Hsieh	
5,136,220	A *	8/1992	Philipp	318/362
5,214,851	A *	6/1993	Althaus	30/45

(Continued)

FOREIGN PATENT DOCUMENTS

GB 2 042 787 A 9/1980

Primary Examiner — David S Luo
(74) *Attorney, Agent, or Firm* — John M. Lipchitz; Steven W. Miller; Kevin C. Johnson

(57) **ABSTRACT**

Razor handles are provided for razors having a battery-powered functionality. Methods of manufacturing such handles are also provided. In one implementation, the handle includes a unitary grip portion constructed to receive a razor head at one end thereof, and a battery cover, mounted on the grip portion. The razor handle allowing for varying vibration settings.
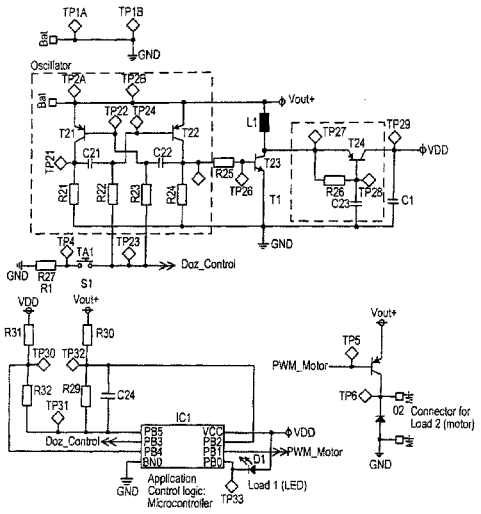
8 Claims, 25 Drawing Sheets