US009408602B2

(12) **United States Patent**
Chu

(10) **Patent No.: US 9,408,602 B2**
(45) **Date of Patent: Aug. 9, 2016**

(54) **DELIVERING PELVIC FLOOR REPAIR IMPLANTS**

(71) Applicant: **Boston Scientific Scimed, Inc.**, Maple Grove, MN (US)

(72) Inventor: **Michael S. H. Chu**, Brookline, MA (US)

(73) Assignee: **Boston Scientific Scimed, Inc.**, Maple Grove, MN (US)

(*) Notice: Subject to any disclaimer, the term of this patent is extended or adjusted under 35 U.S.C. 154(b) by 0 days.

(21) Appl. No.: **14/712,542**

(22) Filed: **May 14, 2015**

(65) **Prior Publication Data**

US 2015/0245836 A1 Sep. 3, 2015

Related U.S. Application Data

(63) Continuation of application No. 13/083,076, filed on Apr. 8, 2011, now Pat. No. 9,044,220.

(60) Provisional application No. 61/330,227, filed on Apr. 30, 2010.

(51) **Int. Cl.**

A61B 17/062	(2006.01)
A61B 17/04	(2006.01)
A61B 17/29	(2006.01)
A61B 17/00	(2006.01)
A61B 17/06	(2006.01)

(52) **U.S. Cl.**

CPC ***A61B 17/0625*** (2013.01); ***A61B 17/0469*** (2013.01); ***A61B 17/0482*** (2013.01); ***A61B 17/2909*** (2013.01); *A61B 2017/00278* (2013.01); *A61B 2017/00805* (2013.01); *A61B 2017/00867* (2013.01); *A61B 2017/00946* (2013.01); *A61B 2017/047* (2013.01); *A61B 2017/06028* (2013.01); *A61B 2017/2905* (2013.01); *A61B 2017/2911* (2013.01); *A61B 2017/2929* (2013.01)

(58) **Field of Classification Search**

CPC A61B 17/0469; A61B 17/0482; A61B 17/04; A61B 17/00663; A61B 17/0625; A61B 2017/00663

See application file for complete search history.

(56) **References Cited**

U.S. PATENT DOCUMENTS

6,048,351	A	4/2000	Gordon et al.
6,346,111	B1	2/2002	Gordon et al.
7,041,111	B2	5/2006	Chu
7,524,281	B2	4/2009	Chu et al.
7,842,046	B1	11/2010	Nakao
2003/0233107	A1	12/2003	Gellman et al.
2004/0181243	A1	9/2004	Chu et al.

(Continued)

OTHER PUBLICATIONS

Capio (TM) Suture Capturing Device, "Reach, Throw and Capture: One Step. One Device," Boston Scientific Microvasive product brochure, 1998.

(Continued)

Primary Examiner — Charles A Marmor, II
Assistant Examiner — Carrie R Dorna
(74) *Attorney, Agent, or Firm* — Brake Hughes Bellermann LLP

(57) **ABSTRACT**

A medical device for the delivery of pelvic floor repair implants within a pelvic region of a body includes a handle, an elongated shaft member, and a head. A method of delivering a pelvic floor repair implant in a transvaginal implant procedure includes inserting and deploying at least a portion of the medical device into a pelvic region of a body.
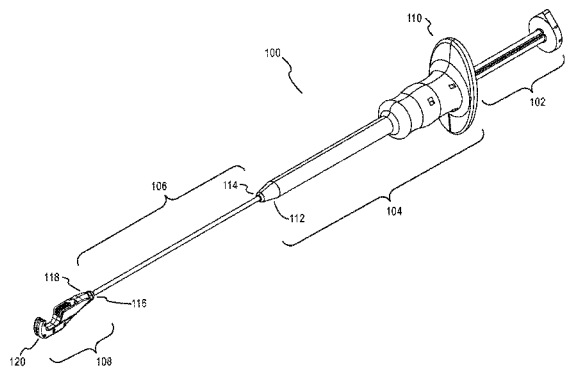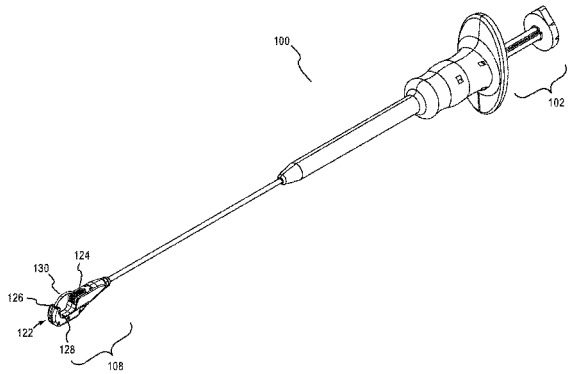
20 Claims, 16 Drawing Sheets