FIG. 1

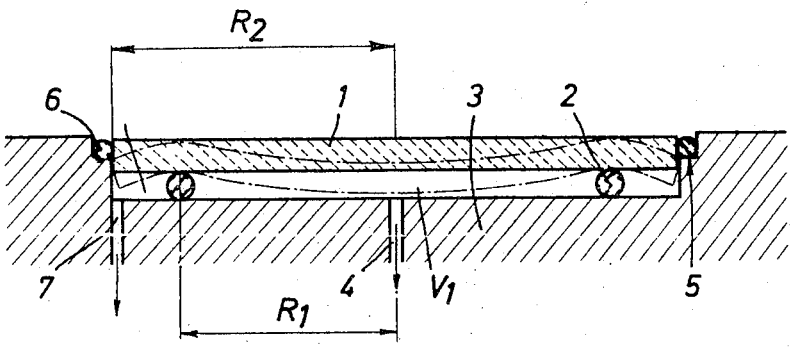

FIG. 2

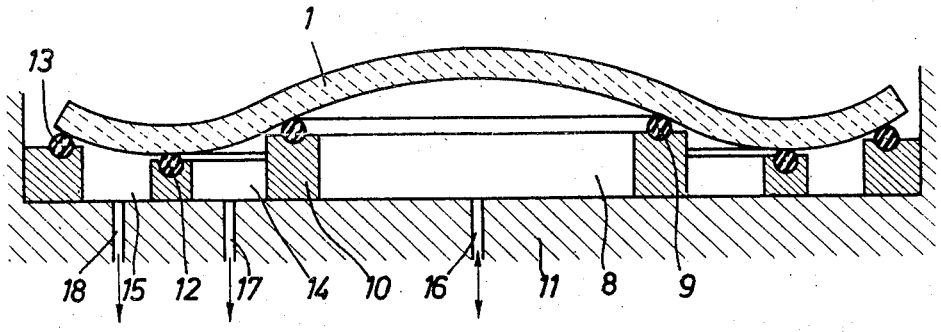

GÉRARD LEMAITRE

MELVILLE, STRASSER, FOSTER and HOFFMAN
attorneys