US005986401A

United States Patent [19]

Thompson et al.

[11] **Patent Number: 5,986,401**

[45] **Date of Patent: *Nov. 16, 1999**

[54] **HIGH CONTRAST TRANSPARENT ORGANIC LIGHT EMITTING DEVICE DISPLAY**

[75] Inventors: **Mark E. Thompson**, Anaheim Hills, Calif.; **Stephen R. Forrest**; **Paul Burrows**, both of Princeton, N.J.

[73] Assignees: **The Trustee of Princeton University**, Princeton, N.J.; **The University of Southern California**, Los Angeles, Calif.

[*] Notice: This patent issued on a continued prosecution application filed under 37 CFR 1.53(d), and is subject to the twenty year patent term provisions of 35 U.S.C. 154(a)(2).

[21] Appl. No.: **08/821,380**

[22] Filed: **Mar. 20, 1997**

[51] **Int. Cl.**[6] **H01J 1/62**

[52] **U.S. Cl.** **313/504**; 313/506

[58] **Field of Search** 313/504, 506, 313/466

[56] **References Cited**

U.S. PATENT DOCUMENTS

4,758,765	7/1988	Mitsumori	313/506
5,045,750	9/1991	Itou et al.	313/466
5,104,749	4/1992	Sato et al.	482/690
5,445,899	8/1995	Budzilek et al.	428/690
5,534,748	7/1996	Oomen	313/479
5,674,635	10/1997	Hsieh et al.	428/690
5,703,436	12/1997	Forrest et al. .	
5,707,745	1/1998	Forrest et al. .	

Primary Examiner—Vip Patel
Assistant Examiner—Matthew J. Gerike
Attorney, Agent, or Firm—Kenyon & Kenyon

[57] **ABSTRACT**

A high contrast organic light emitting device (OLED) display utilizing a transparent (TOLED) display structure with a low-reflectance absorber arranged behind the display. The TOLED display allows substantially all light incident on the display to pass through the display and to be absorbed by the low-reflectance absorber With the amount of light reflected by the display thus substantially reduced, the contrast of images displayed by the display is thus improved.
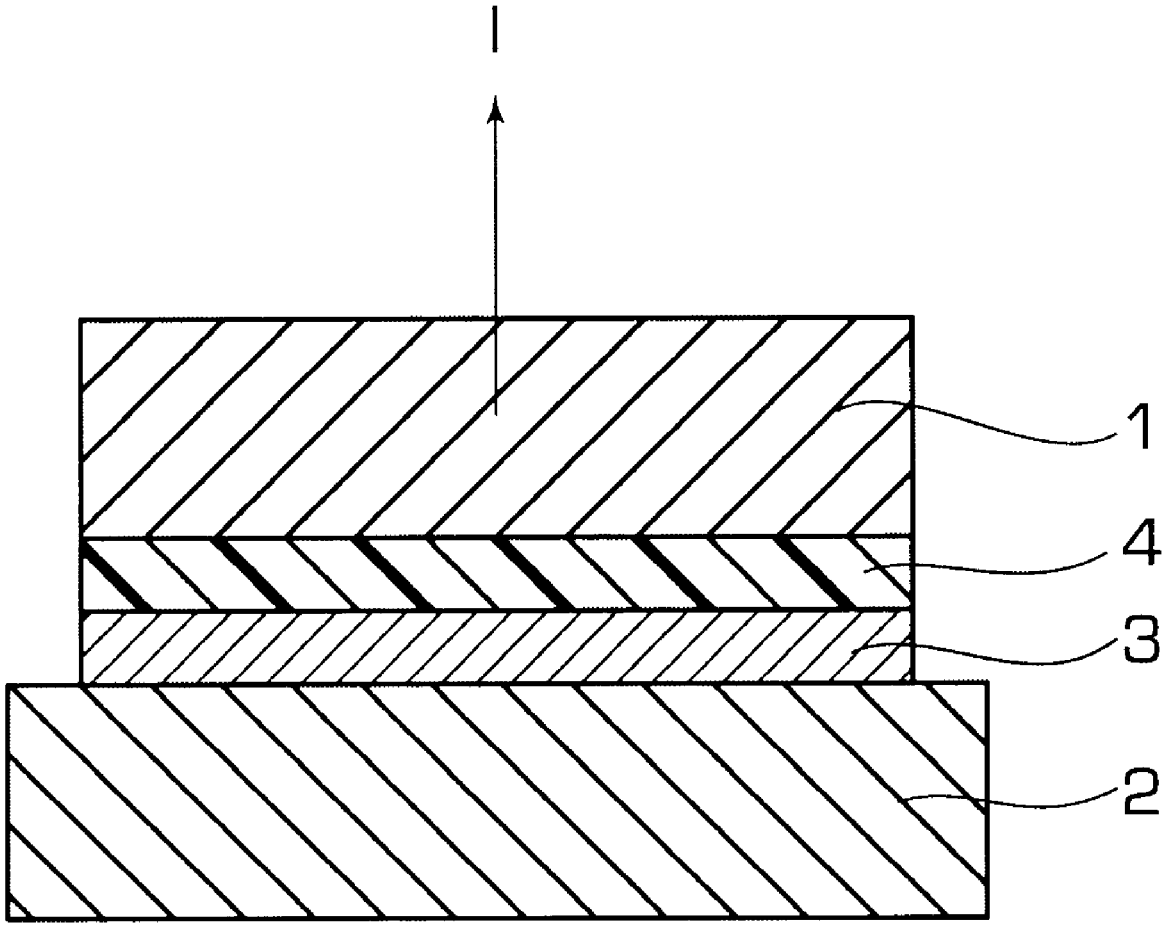
13 Claims, 3 Drawing Sheets