US008185101B1

(12) **United States Patent**
Wiseman et al.

(10) **Patent No.: US 8,185,101 B1**
(45) **Date of Patent: May 22, 2012**

(54) **HANDHELD PORTABLE REAL-TIME TRACKING AND COMMUNICATIONS DEVICE**

(75) Inventors: **James M. Wiseman**, Albuquerque, NM (US); **Loren E. Riblett, Jr.**, Edgewood, NM (US); **Karl L. Green**, Albuquerque, NM (US); **John A. Hunter**, Albuquerque, NM (US); **Robert N. Cook, III**, Rio Rancho, NM (US); **James R. Stevens**, Arlington, VA (US)

(73) Assignee: **Sandia Corporation**, Albuquerque, NM (US)

(*) Notice: Subject to any disclaimer, the term of this patent is extended or adjusted under 35 U.S.C. 154(b) by 629 days.

(21) Appl. No.: **12/388,592**

(22) Filed: **Feb. 19, 2009**

Related U.S. Application Data

(60) Provisional application No. 61/043,753, filed on Apr. 10, 2008.

(51) **Int. Cl.**
H04M 1/00 (2006.01)

(52) **U.S. Cl.** **455/422.1**; 455/426.1; 455/466; 340/539.13; 340/539.2

(58) **Field of Classification Search** 370/395.42, 370/333, 395.2; 455/517, 512, 513, 435.3, 455/435.2, 11.1, 9, 67.11, 67.13, 133, 134, 455/135, 166.2, 552.1, 550.1, 226.1, 226.2, 455/41.1, 41.2, 418, 452.1, 452.2
See application file for complete search history.

(56) **References Cited**

U.S. PATENT DOCUMENTS

5,517,199	A *	5/1996	DiMattei	342/357.31
7,034,678	B2	4/2006	Burkley et al.	
7,091,852	B2	8/2006	Mason et al.	
7,245,216	B2	7/2007	Burkley et al.	
7,817,986	B2 *	10/2010	Bonta et al.	455/411
2005/0001720	A1 *	1/2005	Mason et al.	340/539.13
2005/0171692	A1 *	8/2005	Hamblen et al.	701/209
2005/0221813	A1 *	10/2005	Rajahalme et al.	455/422.1
2007/0297876	A1	12/2007	Meyers et al.	
2008/0018458	A1 *	1/2008	Derrick et al.	340/539.13
2008/0077320	A1	3/2008	Loftus et al.	
2008/0077326	A1	3/2008	Funk et al.	
2008/0218331	A1	9/2008	Baillot	
2008/0221793	A1	9/2008	Fisher et al.	
2008/0224854	A1	9/2008	Furey et al.	

OTHER PUBLICATIONS

Riblett, L.E. et al., "TacNet: Mobile Ad Hoc Secure Communications Network", Proceedings of the 41rst International Carnahan Conference of Security Technology, IEEE, Oct. 2007, Ottawa, Canada.

Riblett, L.E. et al., "TacNet Tracker: Built-in Capabilities for Situational Awareness", Proceedings of the 2008 IEEE International Carnahan Conference of Security Technology, Prague, Czech Republic, Oct. 2008.

* cited by examiner

Primary Examiner — Shawki S Ismail
Assistant Examiner — Christopher Lo
(74) *Attorney, Agent, or Firm* — Olivia J. Tsai

(57) **ABSTRACT**

Portable handheld real-time tracking and communications devices include; a controller module, communications module including global positioning and mesh network radio module, data transfer and storage module, and a user interface module enclosed in a water-resistant enclosure. Real-time tracking and communications devices can be used by protective force, security and first responder personnel to provide situational awareness allowing for enhance coordination and effectiveness in rapid response situations. Such devices communicate to other authorized devices via mobile ad-hoc wireless networks, and do not require fixed infrastructure for their operation.
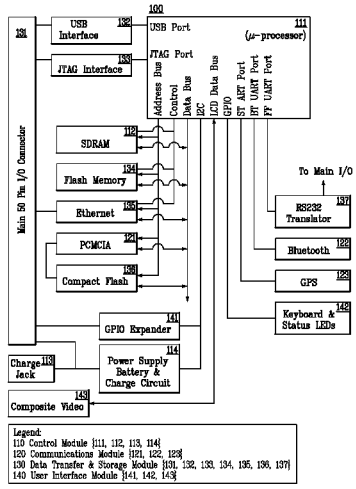
15 Claims, 4 Drawing Sheets