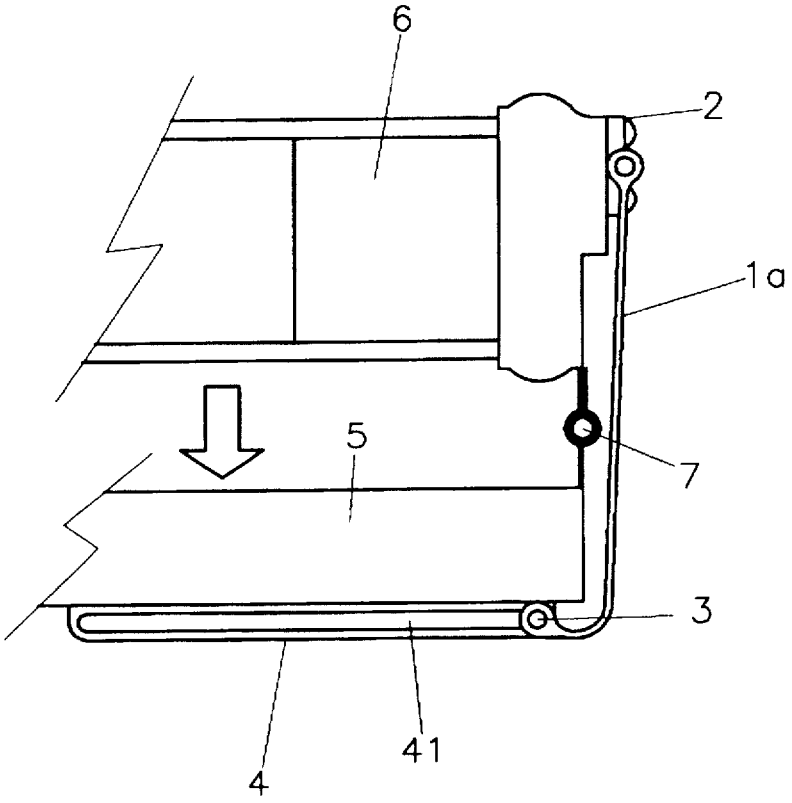

FIG 8

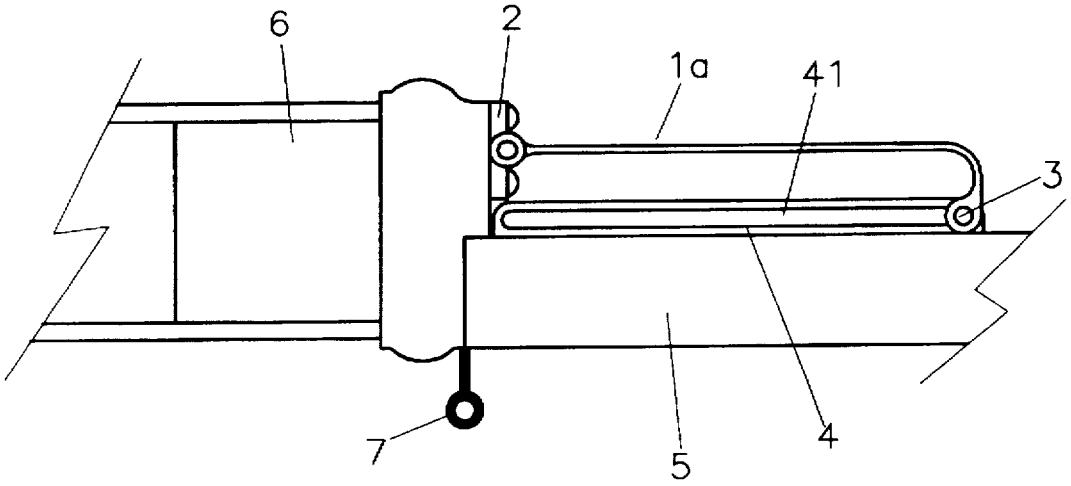

FIG 9