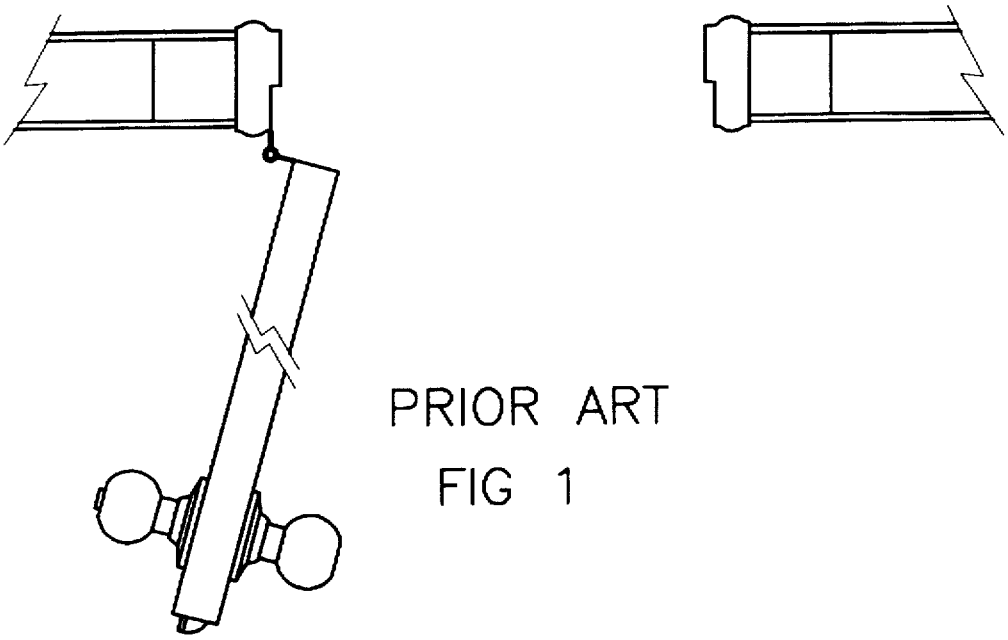

PRIOR ART
FIG 1

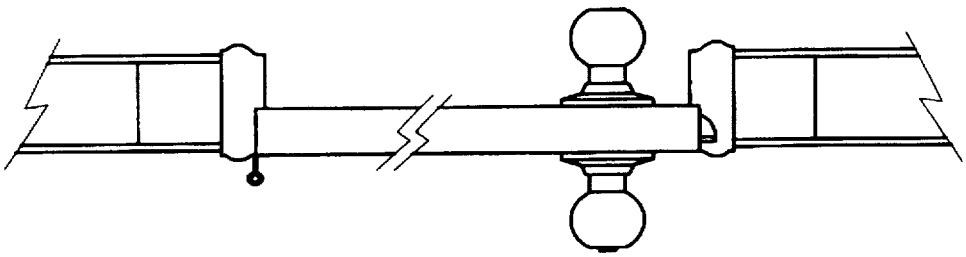

PRIOR ART
FIG 2