Fig. 1

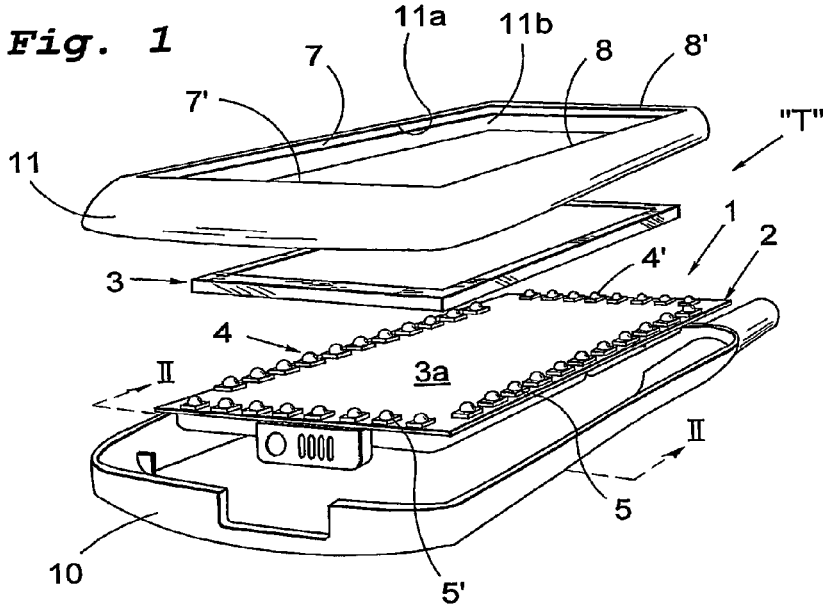
11a
11b
7
8
8'
7'
"T"
11
1
2
4'
3
4
II
3a
II
5
10
5'

Fig. 2

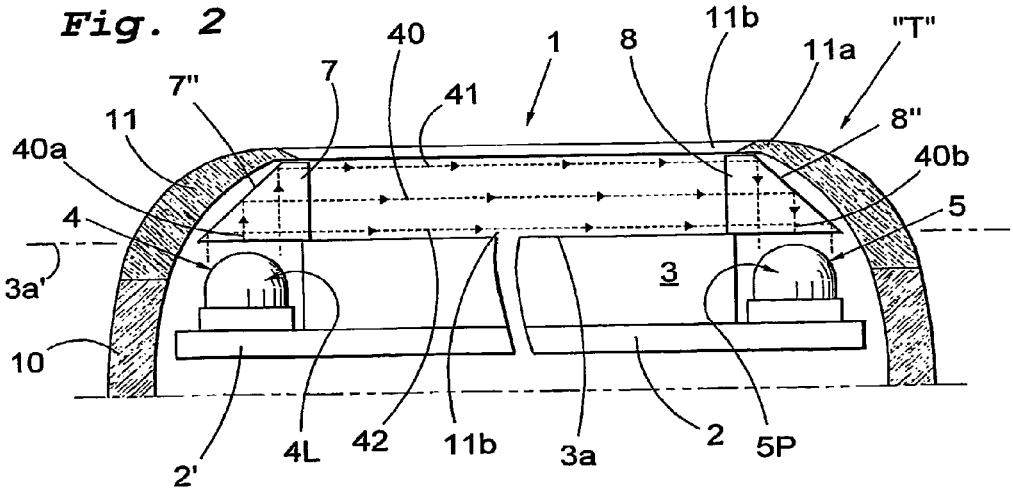
40
1
8
11b
11a
"T"
7"
7
41
8"
11
40a
40b
4
5
3a'
3
10
2'
4L
42
11b
3a
2
5P