July 4, 1939. A. F. DITTMER 2,164,801

CORRECTIVE LENS SYSTEM

Filed Oct. 22, 1936

FIG.1

NORMAL EYE

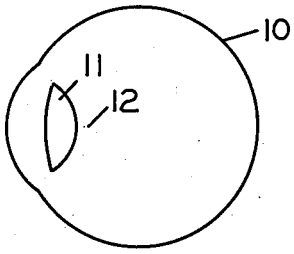

FIG. 2

PRIOR ART

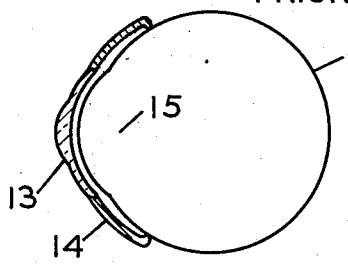

FIG.4

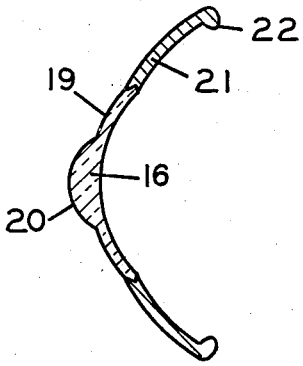

FIG.3

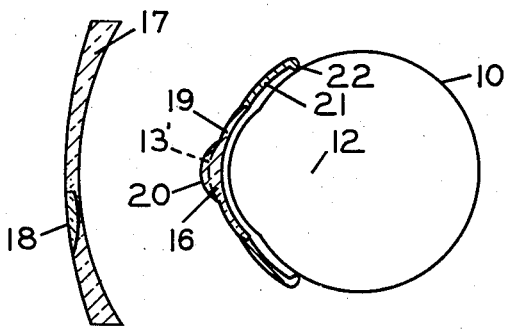

FIG.6

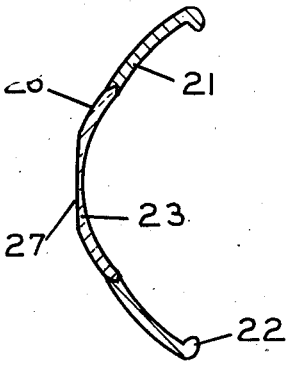

FIG.5

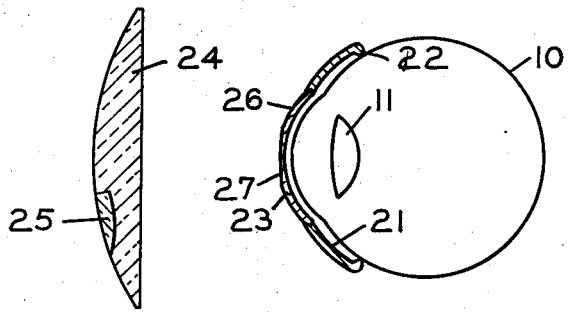

ARTHUR F. DITTMER
INVENTOR.

BY G. A. Ellestad
B. A. Diggins
ATTORNEYS