TONOMETER

Filed June 18, 1959 2 Sheets-Sheet 1

FIG. 1

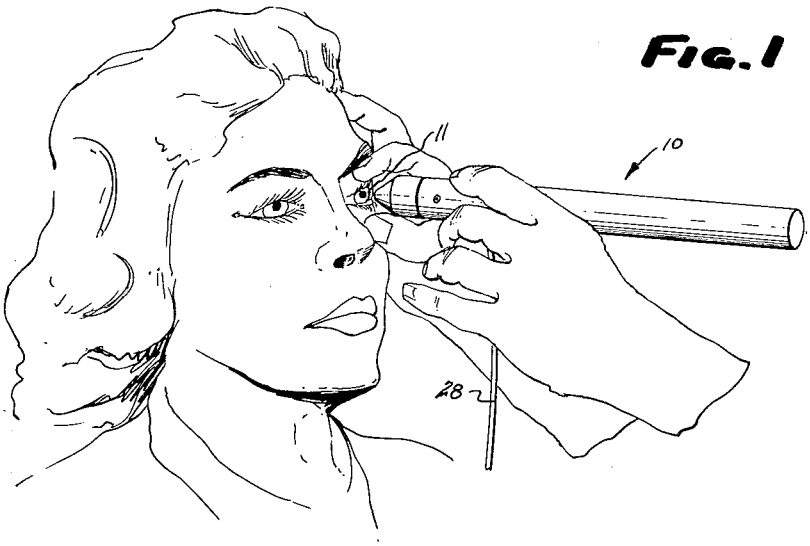

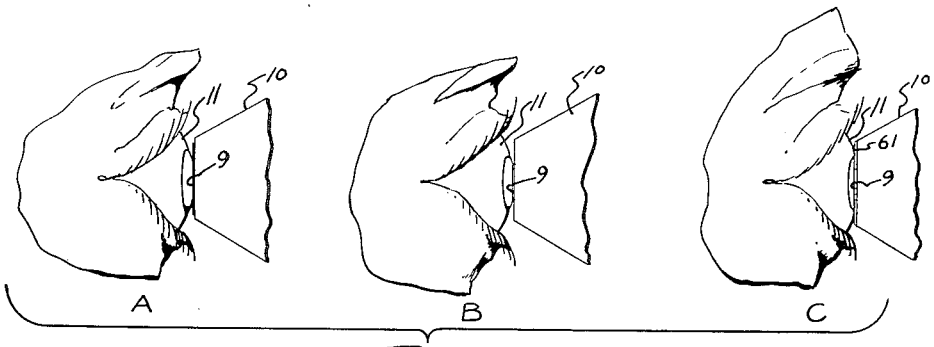

FIG. 2

FIG. 3

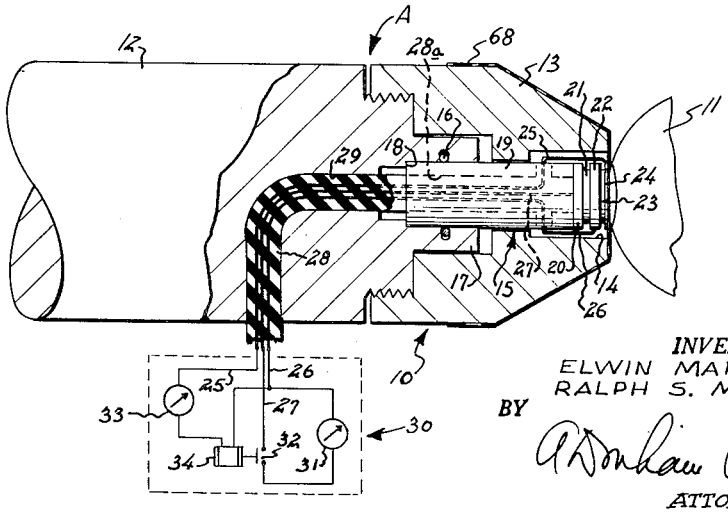

INVENTORS
ELWIN MARG
RALPH S. MACKAY
BY
ATTORNEY