US008348101B2

(12) **United States Patent**
Ciavarella et al.

(10) **Patent No.: US 8,348,101 B2**
(45) **Date of Patent: Jan. 8, 2013**

(54) **LOCKING DISPENSER**

(75) Inventors: **Nick E. Ciavarella**, Seven Hills, OH (US); **Aaron Ronald Reynolds**, North Canton, OH (US)

(73) Assignee: **GOJO Industries, Inc.**, Akron, OH (US)

(*) Notice: Subject to any disclaimer, the term of this patent is extended or adjusted under 35 U.S.C. 154(b) by 951 days.

(21) Appl. No.: **12/417,109**

(22) Filed: **Apr. 2, 2009**

(65) **Prior Publication Data**

US 2010/0252568 A1 Oct. 7, 2010

(51) **Int. Cl.**
B67B 1/00 (2006.01)

(52) **U.S. Cl.** **222/153.13**; 222/147; 222/181.3; 222/325; 141/383; 340/573.1

(58) **Field of Classification Search** 222/65, 222/74–75, 92–107, 153.01–153.04, 153.11–153.14, 222/147, 181.1, 182, 185.1, 325–327, 382, 222/383.3, 385, 401; 141/346–347, 367, 141/383–386; 340/540–543, 573.1
See application file for complete search history.

(56) **References Cited**

U.S. PATENT DOCUMENTS

4,150,673	A *	4/1979	Watt	604/408
4,391,309	A	7/1983	Steiner	
4,489,359	A *	12/1984	Suzuki	361/172
4,907,019	A *	3/1990	Stephens	347/86
5,293,913	A *	3/1994	Preszler	141/367
5,312,017	A	5/1994	Schroeder	
5,605,251	A	2/1997	Retti	
5,738,153	A	4/1998	Gerling	
5,832,972	A *	11/1998	Thomas et al.	141/360
5,875,921	A	3/1999	Osgar	
6,431,400	B1 *	8/2002	O'Maley et al.	222/41
6,619,512	B1 *	9/2003	Sayers et al.	222/207
7,028,861	B2	4/2006	Sayers	
7,066,357	B2 *	6/2006	Ciavarella et al.	222/156
7,837,066	B2 *	11/2010	Reynolds et al.	222/52
7,980,421	B2 *	7/2011	Ophardt et al.	222/1
2006/0124662	A1 *	6/2006	Reynolds et al.	222/23
2008/0283556	A1 *	11/2008	Snodgrass	222/325
2009/0236440	A1	9/2009	Anderson	

FOREIGN PATENT DOCUMENTS

WO WO 03/033398 A1 4/2003

OTHER PUBLICATIONS

ISA/EPO, International Search Report, Apr. 30, 2010.

* cited by examiner

Primary Examiner — Kevin P Shaver
Assistant Examiner — Andrew P Bainbridge
(74) *Attorney, Agent, or Firm* — Renner, Kenner, Greive, Bobak, Taylor & Weber

(57) **ABSTRACT**

A locking dispenser to dispense material from a replaceable refill container maintains a lock assembly having a plurality of spring-biased plungers configured in accordance with a predetermined lock parameter. The refill container carries a collar that includes a plurality of markers configured in accordance with a predetermined key parameter. Thus, when a refill container having a key parameter that is compatible with the lock parameter of the key block is installed at the dispenser, the plungers transition from a locked state to an unlocked state to enable the movement of an actuator, which when depressed by a user, results in the dispensement of material from the refill container.
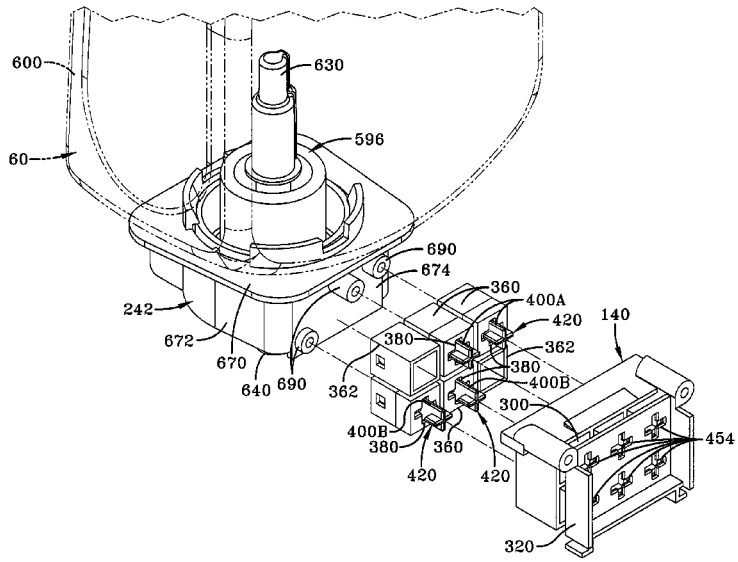
33 Claims, 16 Drawing Sheets