US009638501B2

(12) **United States Patent**
Parker et al.

(10) **Patent No.: US 9,638,501 B2**
(45) **Date of Patent: May 2, 2017**

(54) **TARGET ASSIGNMENT PROJECTILE**

(75) Inventors: **William P. Parker**, Waitsfield, VT (US); **Thomas F. A. Bibby**, St. Albans, VT (US)

(73) Assignee: **William P. Parker**, Waitsfield, VT (US)

(*) Notice: Subject to any disclaimer, the term of this patent is extended or adjusted under 35 U.S.C. 154(b) by 0 days.

(21) Appl. No.: **10/483,753**

(22) Filed: **Sep. 27, 2004**

(65) **Prior Publication Data**

US 2006/0196383 A1 Sep. 7, 2006

Related U.S. Application Data

(60) Provisional application No. 60/506,333, filed on Sep. 27, 2003.

(51) **Int. Cl.**
F42B 10/00 (2006.01)
F42B 12/38 (2006.01)
F42B 12/36 (2006.01)

(52) **U.S. Cl.**
CPC ***F42B 12/382*** (2013.01); ***F42B 12/365*** (2013.01)

(58) **Field of Classification Search**
CPC F42B 12/365; F42B 12/382
USPC 501/513, 201; 434/23, 17; 244/3.2, 244/3.23; 102/501–529
See application file for complete search history.

(56) **References Cited**

U.S. PATENT DOCUMENTS

2,393,648 A * 1/1946 Martin 102/519
3,528,530 A * 9/1970 Franck et al. 188/377
3,757,632 A * 9/1973 Bellinger 89/1.1
3,861,311 A 1/1975 Bilsbury et al.
4,245,560 A * 1/1981 Rambauske 102/213
4,448,106 A * 5/1984 Knapp 89/1.11
4,655,411 A * 4/1987 Franzen et al. 244/3.11
4,710,028 A * 12/1987 Grenier et al. 356/620
4,722,282 A * 2/1988 Synofzik et al. 102/513
4,934,273 A * 6/1990 Endriz 102/336
5,070,791 A 12/1991 Dineen et al.
5,080,305 A * 1/1992 Stencel B64D 1/14 102/384
5,280,751 A 1/1994 Muirhead et al.
5,406,287 A * 4/1995 Pinkus 342/13
5,841,059 A * 11/1998 Laurend et al. 102/213
5,864,086 A * 1/1999 Ettmuller 102/489
6,065,404 A 5/2000 Ripingill, Jr. et al.
6,085,661 A 7/2000 Halverson et al.
6,298,787 B1 * 10/2001 Warnagiris 102/502
6,349,652 B1 * 2/2002 Hepner et al. 102/519
6,378,437 B1 4/2002 Burke, Jr. et al.
6,422,507 B1 * 7/2002 Lipeles 244/3.13
6,531,965 B1 3/2003 Kaiser et al.
6,581,522 B1 * 6/2003 Julien et al. 102/431
6,700,913 B2 * 3/2004 Pinneo et al. 372/43.01
6,880,467 B1 * 4/2005 Knapp 102/513
6,959,893 B1 * 11/2005 Sadowski et al. 244/3.16
(Continued)

OTHER PUBLICATIONS

PCT International Search Report (PCT/US04/44098); Date of Mailing Feb. 6, 2008; 1 page.

Primary Examiner — Gabriel Klein
(74) *Attorney, Agent, or Firm* — James Marc Leas

(57) **ABSTRACT**

A projectile includes an ordnance portion configured to impact a target and a communication apparatus positioned rearward of the ordnance portion. The projectile is configured to rotate about and travel along a longitudinal axis after launch.
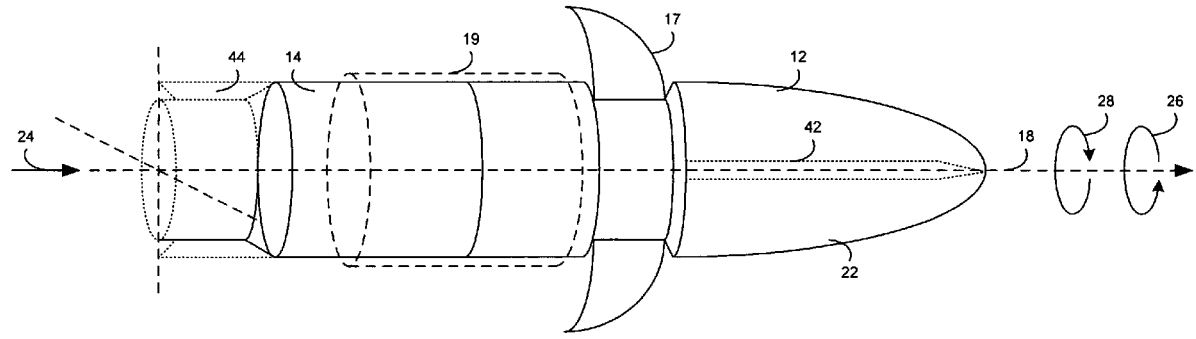
60 Claims, 7 Drawing Sheets