FIG. 1

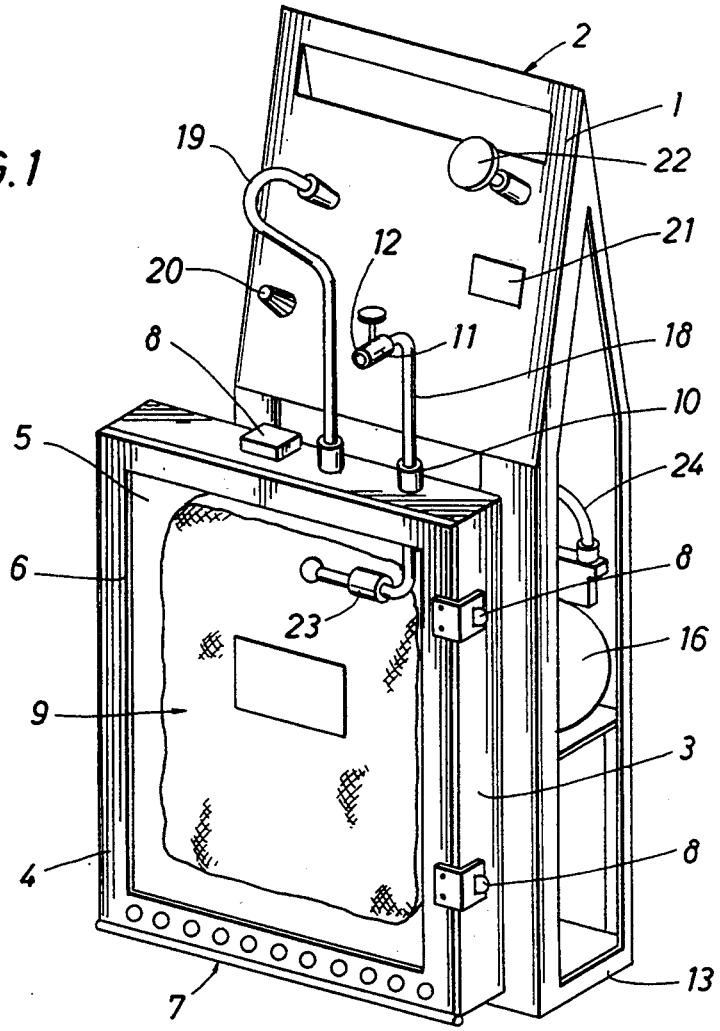
2
1
22
19
21
12
20
11
18
8
10
5
24
6
8
23
16
9
3
4
8
7
13

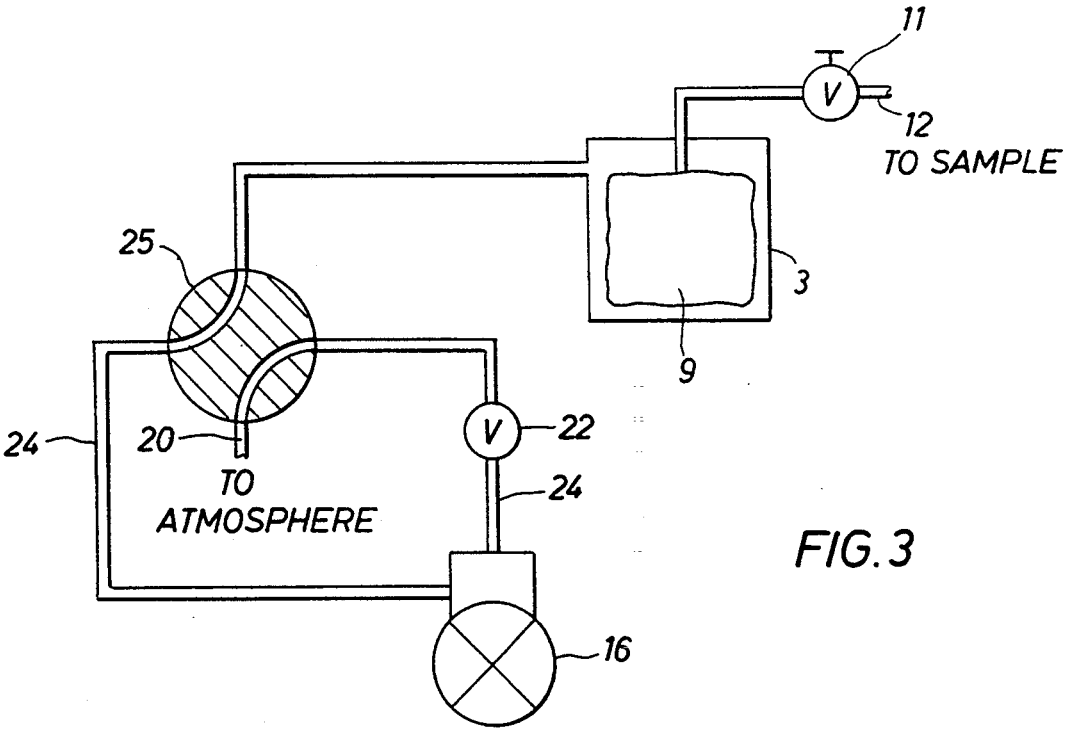
11
V
12
TO SAMPLE
25
3
9
24
20
V
22
TO
ATMOSPHERE
24
16

FIG. 3