US009636701B2

(12) **United States Patent**
Abernathy et al.

(10) **Patent No.: US 9,636,701 B2**
(45) **Date of Patent: May 2, 2017**

(54) **VISCOUS MATERIAL NONCONTACT JETTING SYSTEM**

(75) Inventors: **Ron Abernathy**, Vista, CA (US); **Alec J. Babiarz**, Encinitas, CA (US); **Nicholas Anthony Barendt**, Fairview Park, OH (US); **Robert Ciardella**, Rancho Santa Fe, CA (US); **James Everett Cooper, Jr.**, Vista, CA (US); **Kenneth S. Espenschied**, Olmsted Township, OH (US); **Erik Fiske**, Carlsbad, CA (US); **Christopher L. Giusti**, San Marcos, CA (US); **Patrick R. Jenkins**, Carlsbad, CA (US); **Alan Lewis**, Carlsbad, CA (US); **Raymond Andrew Merritt**, San Diego, CA (US); **Naoya Ian Nagano**, Oceanside, CA (US); **Horatio Quinones**, San Marcos, CA (US); **Thomas Ratledge**, San Marcos, CA (US); **Joe Sherman**, Fallbrook, CA (US); **Floriana Suriawidjaja**, Carlsbad, CA (US); **Todd Weston**, Vista, CA (US)

(73) Assignee: **Nordson Corporation**, Westlake, OH (US)

(*) Notice: Subject to any disclaimer, the term of this patent is extended or adjusted under 35 U.S.C. 154(b) by 0 days.

(21) Appl. No.: **13/568,278**

(22) Filed: **Aug. 7, 2012**

(65) **Prior Publication Data**

US 2012/0285990 A1 Nov. 15, 2012

Related U.S. Application Data

(63) Continuation of application No. 13/079,300, filed on Apr. 4, 2011, now Pat. No. 8,257,779, which is a

(Continued)

(51) **Int. Cl.**
B05C 11/00 (2006.01)
B05C 11/10 (2006.01)

(Continued)

(52) **U.S. Cl.**
CPC ***B05C 11/1034*** (2013.01); ***B05C 5/0225*** (2013.01); ***B05C 11/10*** (2013.01); *H05K 3/3484* (2013.01)

(58) **Field of Classification Search**
CPC B05C 11/1034

(Continued)

(56) **References Cited**

U.S. PATENT DOCUMENTS

721,900	A	3/1903	Lassoe
4,478,370	A	10/1984	Hastings

(Continued)

FOREIGN PATENT DOCUMENTS

JP	2001340796	A	12/2001
JP	2002542920	A	12/2002
WO	0065316		11/2000

OTHER PUBLICATIONS

Precision Valve & Automation, Valves, Controllers, Tanks & Accessories, Manual Fluid Dispensing Systems, Product Brochure, undated, 15 pgs.

(Continued)

Primary Examiner — Xiao Zhao
(74) *Attorney, Agent, or Firm* — Baker & Hostetler LLP

(57) **ABSTRACT**

A viscous material noncontact jetting system has a jetting dispenser mounted for relative motion with respect to a surface. A control is operable to cause the jetting dispenser to jet a viscous material droplet that is applied to the surface as a viscous material dot. A device, such as a camera or weigh scale, is connected to the control and provides a feedback signal representing a size-related physical charac-
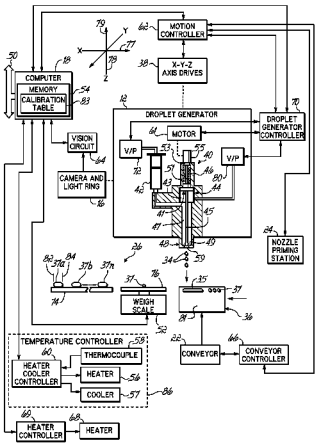
(Continued)