OR 2,836,101

May 27, 1958 J. DE SWART 2,836,101

OPTICAL ELEMENTS

Filed Sept. 1, 1955

T201:
X226.

FIG. 1.

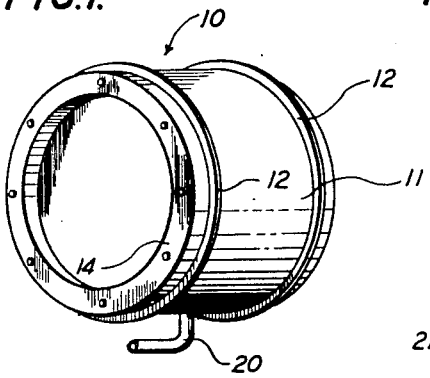

FIG. 2.

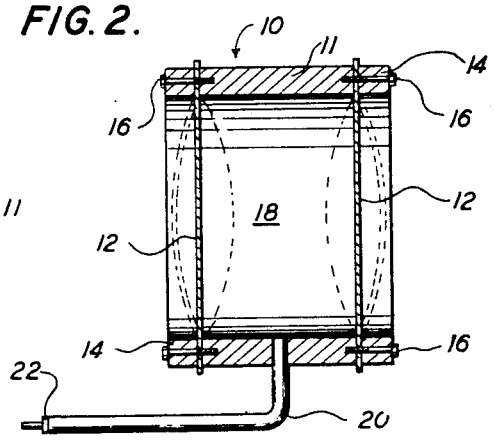

FIG. 3

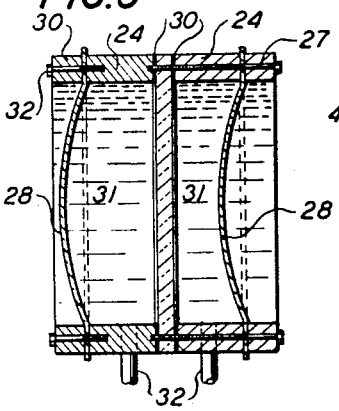

FIG. 4.

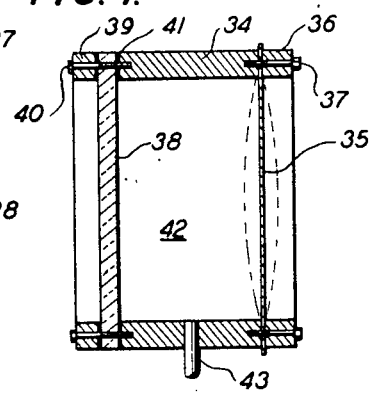

FIG. 5.

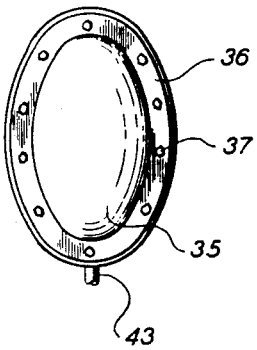

FIG. 6.

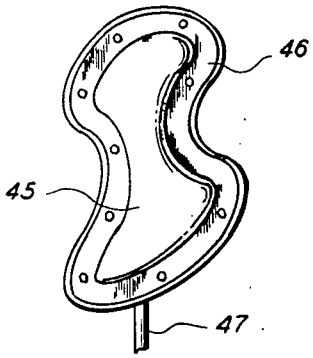

FIG. 7.

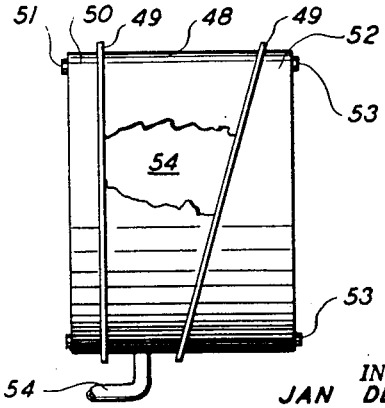

INVENTOR.
JAN DE SWART

BY

Christie, Parker & Hale

ATTORNEYS