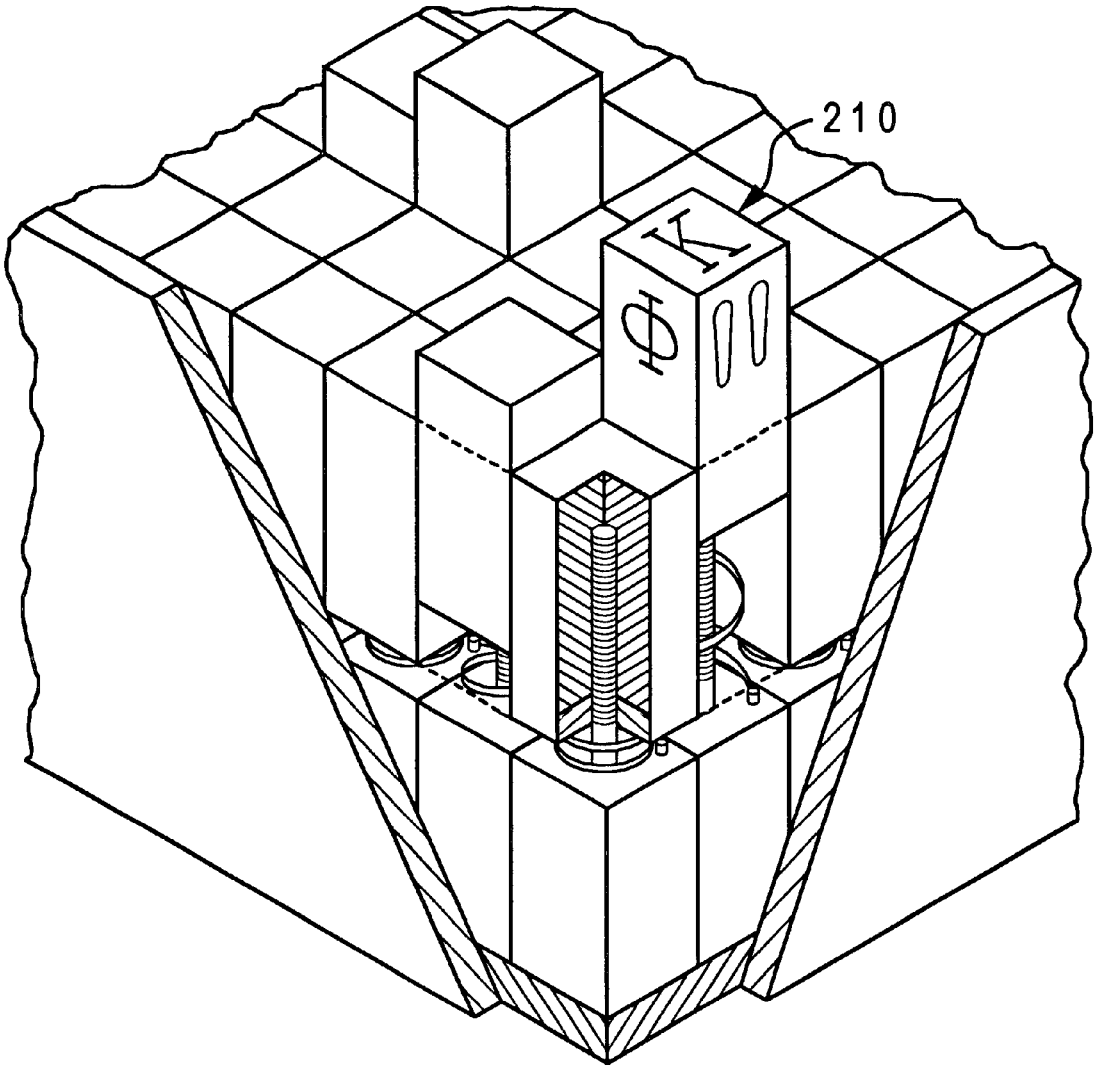

Fig. 10
Prior Art